# Trellis Design Calculations

Prepared for:

**Omnimax**
30 Technology Parkway South
Suite 400/Suite 600
Peachtree Corners, GA 30092

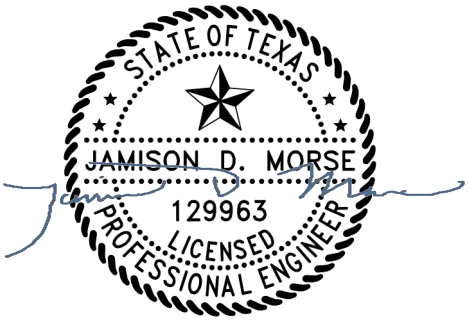


Prepared by:
**PVE, LLC**
2000 Georgetown Drive, Suite 101
Sewickley, PA 15143
Phone ... (724) 444-1100

# TABLE OF CONTENTS

*Page No.*

TITLE SHEET ..... 1

TABLE OF CONTENTS ..... 2

DESIGN CODES AND STANDARDS ..... 3

GENERAL NOTES ..... 4

DESIGN LOADS ..... 5

DESIGN CALCULATIONS ..... 6

APPENDIX 'A' (TECHNICAL & PRODUCT DATA SHEETS) ..... 29

# DESIGN CODES AND STANDARDS

The following codes and standards, including all specifications referenced within, apply to the design and construction of this project:

- IBC, INTERNATIONAL BUILDING CODE – 2015
- ASCE 7-10, MINIMUM DESIGN LOADS FOR BUILDINGS AND OTHER STRUCTURES
- ADM, ALUMINUM DESIGN MANUAL – 2010

# GENERAL NOTES

1. Contractor to verify all dimensions in the field prior to installation. Do not scale off drawings.
2. All members shall be saw cut in field as required.
3. No splices shall be permitted unless indicated otherwise on the drawings.
4. Touch up all scratches with dealer provided colors to match.
5. Welding is not permitted, unless otherwise indicated on the drawings.
6. The contents show the application of aluminum Knotwood and Equinox framing components only. The installing contractor is to refer to the project documents for additional requirements.
7. Dimensions herein are for engineering purposes only and must be reviewed for the purpose of approval. All conditions are subject to approval and to field verification prior to fabrication or installation.
8. Before ordering, fabricating or erecting any material, make any necessary surveys and measurements to verify that in place work has been built according to the contract documents and are within acceptable tolerances. This includes the original buildings and all additions thereto. Notify the Architect/Engineer and owner's representatives of any discrepancies prior to construction.
9. Temporary bracing of the system and safety during construction is solely the responsibility of the contractor. Temporary bracing of the system shall remain in place until the system is totally in place. Contractor shall coordinate locations of temporary bracing with other contractors. Refer to drawings for additional criteria.
10. This submittal is subject to the review and approval of the project Architect/Engineer of record prior to installation.

# DESIGN LOADS

**PVE LLC**
2000 Georgetowne Drive, Suite 101
Sewickley, PA 15143-8992
724-444-1100

JOB TITLE
JOB NO. SHEET NO.
CALCULATED BY DATE
CHECKED BY DATE

Ultimate Wind Pressures

## Wind Loads - Components & Cladding : h ≤ 60'

| | | | |
|---|---|---|---|
| Kh (case 1) = | 0.95 | h = | 25.0 ft |
| Base pressure (qh) = | **39.2 psf** | a = | 10.0 ft |
| Minimum parapet ht = | 0.0 ft | GCpi = | +/-0.18 |
| Roof Angle (θ) = | 0.0 deg | | |
| Type of roof = | Monoslope | | |

### Roof

| | GCp +/- GCpi | | | | Surface Pressure (psf) | | | | User input | |
|---|---|---|---|---|---|---|---|---|---|---|
| Area | 10 sf | 50 sf | 100 sf | 500 sf | 10 sf | 50 sf | 100 sf | 500 sf | 200 sf | 225 sf |
| Negative Zone 1 | -1.18 | -1.11 | -1.08 | -1.08 | -46.2 | -43.5 | -42.3 | -42.3 | -42.3 | -42.3 |
| Negative Zone 2 | -1.98 | -1.49 | -1.28 | -1.28 | -77.6 | -58.4 | -50.1 | -50.1 | -50.1 | -50.1 |
| Negative Zone 3 | -2.98 | -1.79 | -1.28 | -1.28 | -116.7 | -70.1 | -50.1 | -50.1 | -50.1 | -50.1 |
| Positive All Zones | 0.48 | 0.41 | 0.38 | 0.38 | 18.8 | 16.1 | 16.0 | 16.0 | 16.0 | 16.0 |
| Overhang Zone 1&2 | -1.7 | -1.63 | -1.6 | -1.1 | -66.6 | -63.8 | -62.7 | -43.1 | -54.2 | -52.8 |
| Overhang Zone 3 | -2.8 | -1.4 | -0.8 | -0.8 | -109.7 | -54.8 | -31.3 | -31.3 | -31.3 | -31.3 |

Overhang pressures in the table above assume an internal pressure coefficient (Gcpi) of 0.0
Overhang soffit pressure equals adj wall pressure (which includes internal pressure of 7.1 psf)

### Parapet

qp = 39.2 psf

| | | Surface Pressure (psf) | | | | | | User input |
|---|---|---|---|---|---|---|---|---|
| Solid Parapet Pressure | | 10 sf | 20 sf | 50 sf | 100 sf | 200 sf | 500 sf | 0 sf |
| CASE A: | Zone 2 : | 0.0 | 0.0 | 0.0 | 0.0 | 0.0 | 0.0 | 0.0 |
| | Zone 3 : | 0.0 | 0.0 | 0.0 | 0.0 | 0.0 | 0.0 | 0.0 |
| CASE B: | Edge zones 2 : | 0.0 | 0.0 | 0.0 | 0.0 | 0.0 | 0.0 | 0.0 |
| | Corner zones 3 : | 0.0 | 0.0 | 0.0 | 0.0 | 0.0 | 0.0 | 0.0 |

### Walls

| | GCp +/- GCpi | | | | Surface Pressure (psf) | | | | User input | |
|---|---|---|---|---|---|---|---|---|---|---|
| Area | 10 sf | 100 sf | 200 sf | 500 sf | 10 sf | 100 sf | 200 sf | 500 sf | 10 sf | 15 sf |
| Negative Zone 4 | -1.17 | -1.01 | -0.96 | -0.90 | -45.8 | -39.6 | -37.7 | -35.3 | -45.8 | -44.7 |
| Negative Zone 5 | -1.44 | -1.12 | -1.03 | -0.90 | -56.4 | -44.0 | -40.2 | -35.3 | -56.4 | -54.2 |
| Positive Zone 4 & 5 | 1.08 | 0.92 | 0.87 | 0.81 | 42.3 | 36.1 | 34.2 | 31.7 | 42.3 | 41.2 |

Note: GCp reduced by 10% due to roof angle <= 10 deg.

# DESIGN CALCULATIONS

**Methodology:**

When checking **Knotwood™** Products (slats, posts, etc.), the applied loads, generated from ASCE 7-10, are compared to allowable tension and shear strengths per the Aluminum Design Manual.

Per ASCE 7-10, the trellis is considered "Components and Cladding". The trellis is considered to be the "support frame". A concentrated load of 200 lbs is applied directly to frame members. For wind loading the pergola is considered to be an "Components and Cladding" attached directly to the building.

**Miscellaneous:**

The drawings and models shown within the calculation sheets are not meant to be used for fabrication nor performing work. During the design process, elements change, and we do not change the CAD drawings in this booklet. They are for illustrative purposes only to assist in the preparation of the calculations and may not accurately represent the actual work to be performed. The contractor shall refer to the actual drawings to perform all their work.

**Fastener Requirements:**

Self-Tapping Metal Screws - #14 Minimum.
Galvanized Unless Noted Otherwise
Aluminum Where Noted At High/Salt Exposure

**Materials Requirements:**

Knotwood Structural Post
Aluminum Alloy 6061-T6: Fy=35 ksi (MIN) Fu=38 ksi (MIN)

Knotwood Battens & Internal Clips:
Aluminum Alloy 6063-T6: Fy=25 ksi (MIN) Fu=30 ksi (MIN)

**Material Allowable Stress:**

Per the ADM Tables 2-19 & 2-21, square and rectangular tubing are not subject to lateral-torsional buckling.

Allowable Bending Stress per ADM: Modulus of Elasticity:

$F_{ab6061} := 19.5\ ksi$ $F_{ab6063} := 15.2\ ksi$ $F_{ab6063T5} := 9.7\ ksi$ $E := 10100\ ksi$

Shear Stress:

$S_1 := \frac{(3.94 - 2\ (0.118))}{0.118} = 31.39$ Use: $F_{av4x4} := 12.7\ ksi$ (4x4 Post)

$S_2 := \frac{(7.89 - 2\ (0.0984))}{0.0984} = 78.183$ Use: $F_{av2x8} := \frac{38665\ ksi}{S_2^{\,2}} = 6.325\ ksi$ (2x8 Batten)

**Material Section Properties:**

*7x7 Equinox Post:*

$I_{x7x7EP} := 46.5\ in^4$ $I_{y7x7EP} := 46.5\ in^4$ $A_{7x7EP} := 6.17\ in^2$

$y_{x7x7EP} := 3.5\ in$ $y_{y7x7EP} := 3.5\ in$ $t_{w7x7EP} := 0.233\ in$

$S_{x7x7EP} := \frac{I_{x7x7EP}}{y_{x7x7EP}} = 217714\ mm^3$ $S_{y7x7EP} := \frac{I_{y7x7EP}}{y_{y7x7EP}} = 217714\ mm^3$

$S_{x7x7EP} = 13.286\ in^3$ $S_{y7x7EP} = 13.286\ in^3$

*2x8 Batten KEB20050:*

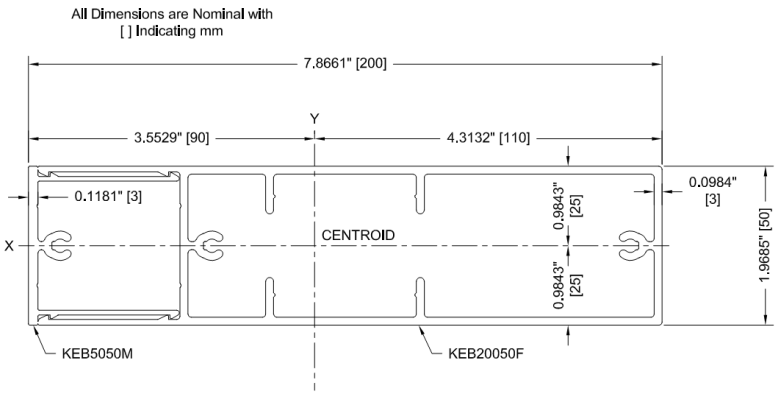


$I_{xB50200} := 1.6747\ in^4$ (Ix found per AutoCAD) $I_{yB50200} := 17.8302\ in^4$ (Iyy found per AutoCAD)

$y_{xB50200} := 0.9843\ in$ $y_{yB50200} := 4.3132\ in$

$S_{xB50200} := \frac{I_{xB50200}}{y_{xB50200}} = 1.701\ in^3$ $S_{yB50200} := \frac{I_{yB50200}}{y_{yB50200}} = 4.134\ in^3$ $A_{B50200} := 2.684\ in^2$

$A_{webB50200x} := 7.87\ in \cdot 0.0984\ in = 0.774\ in^2$ $A_{webB50200y} := 1.97\ in \cdot 0.0984\ in = 0.194\ in^2$

*4x4 Post (KESG100100):*

$I_{x100100} := 1822940\ mm^4$ (Ixx per Knotwood Techfiles) $I_{y100100} := 1822940\ mm^4$ (Iyy per Knotwood Techfiles)

$y_{x100100} := 50\ mm$ $y_{y100100} := 50\ mm$

$S_{x100100} := \frac{I_{x100100}}{y_{x100100}} = 36459\ mm^3$ $S_{y100100} := \frac{I_{y100100}}{y_{y100100}} = 36459\ mm^3$

$S_{x100100} = 2.225\ in^3$ $S_{y100100} = 2.225\ in^3$

**Load Requirements:**

*Dead Load:*

$DL_{self7x7EP} := 0.1 \cdot \frac{lbf}{in^3} \cdot A_{7x7EP} = 7.404\ plf$ (Self weight of 7x7 Equinox Post)

$DL_{selfB50200B} := 3.752\ \frac{kgf}{m} = 2.521\ plf$ (Self weight of 2x8 Batten Piece B)

$DL_{selfB50200A} := 0.924\ \frac{kgf}{m} = 0.621\ plf$ (Self weight of 2x8 Batten Piece A)

$DL_{selfB50200} := DL_{selfB50200A} + DL_{selfB50200B} = 3.142\ plf$ (Combined self weight of 2x8 Batten Pieces)

*Live Loads:*

$p_{LL} := 20\ psf$ (Distributed Load)

$P_{req} := 200\ lbf$ (Point Load)

*Wind Loads:*

$p_{Wind} := 56.4\ psf$ (Maximum Lateral Ultimate Wind Pressure)

$p_{WindUplift} := 50.1\ psf$ (Maximum Uplift Ultimate Wind Pressure)

*Seismic Loads:*

$w_p := 7.4\ plf$ (Heaviest Component Weight)

$w_{Seismic} := 0.036 \cdot w_p = 0.3\ plf$

Due to low dead loads of aluminum, the seismic loads are neglected as wind loads will control over seismic.

**PERGOLA DESIGN:**

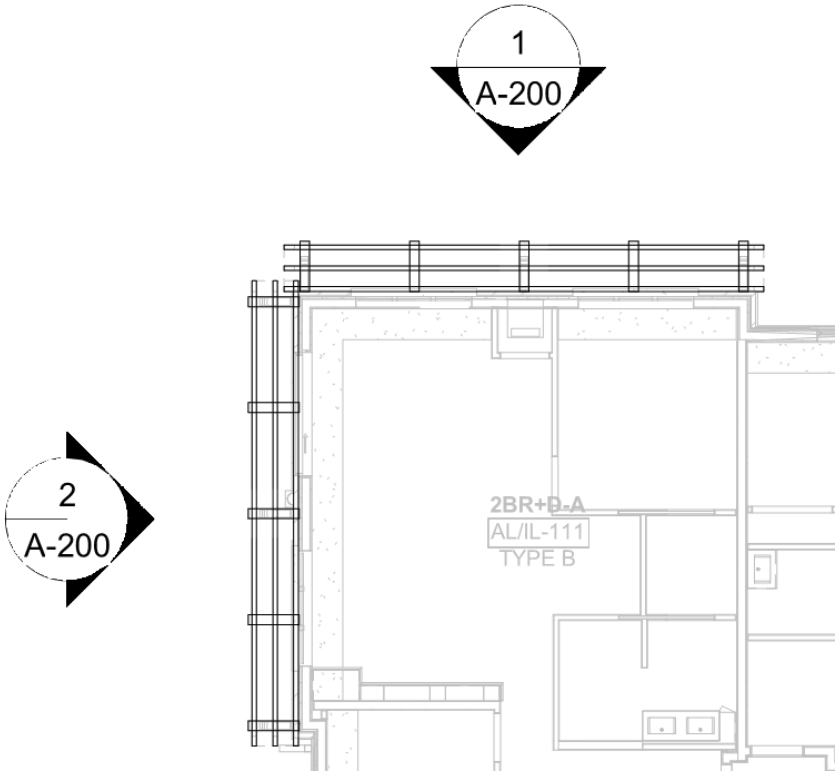


**Figure 1 - Typical Trellis RCP**

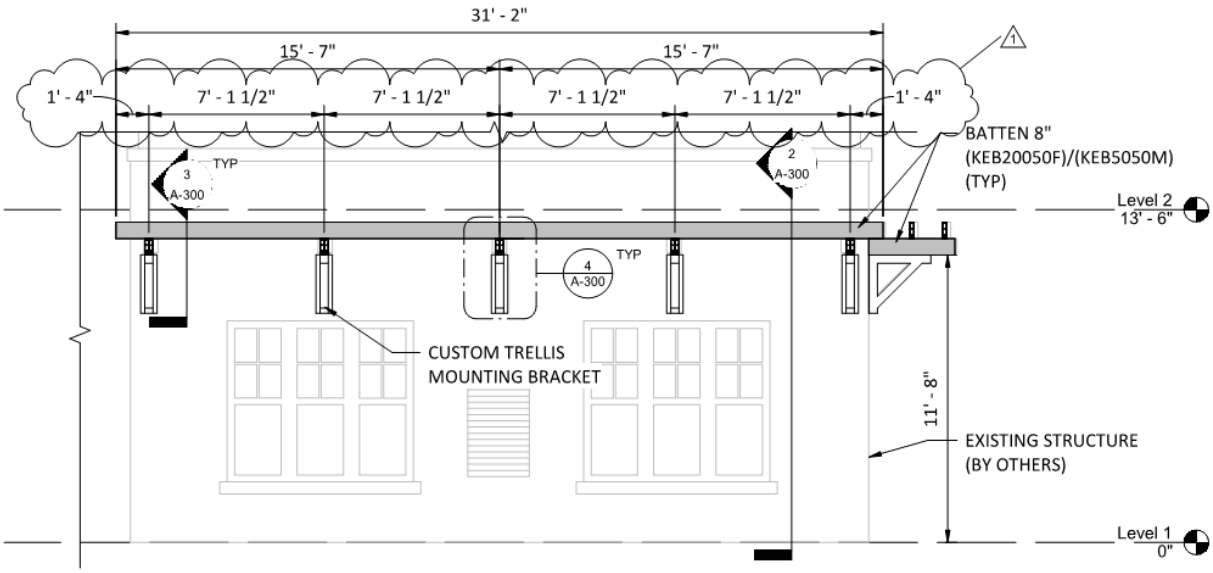


**Figure 2 - Typical Trellis Elevation View**

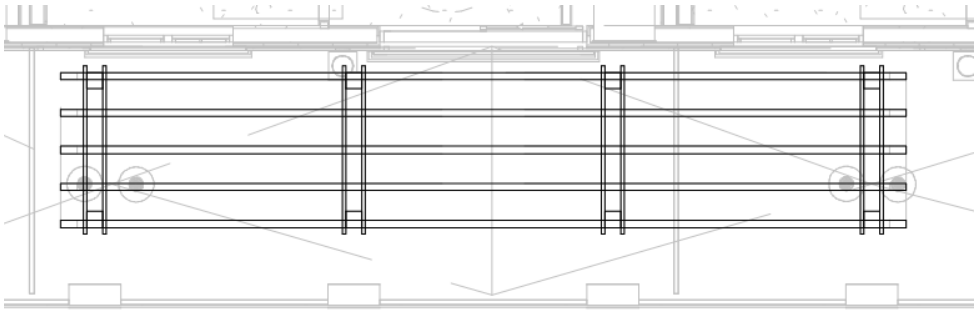

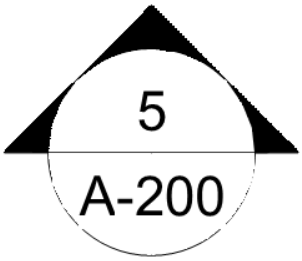


**Figure 3 - Typical Pergola RCP**

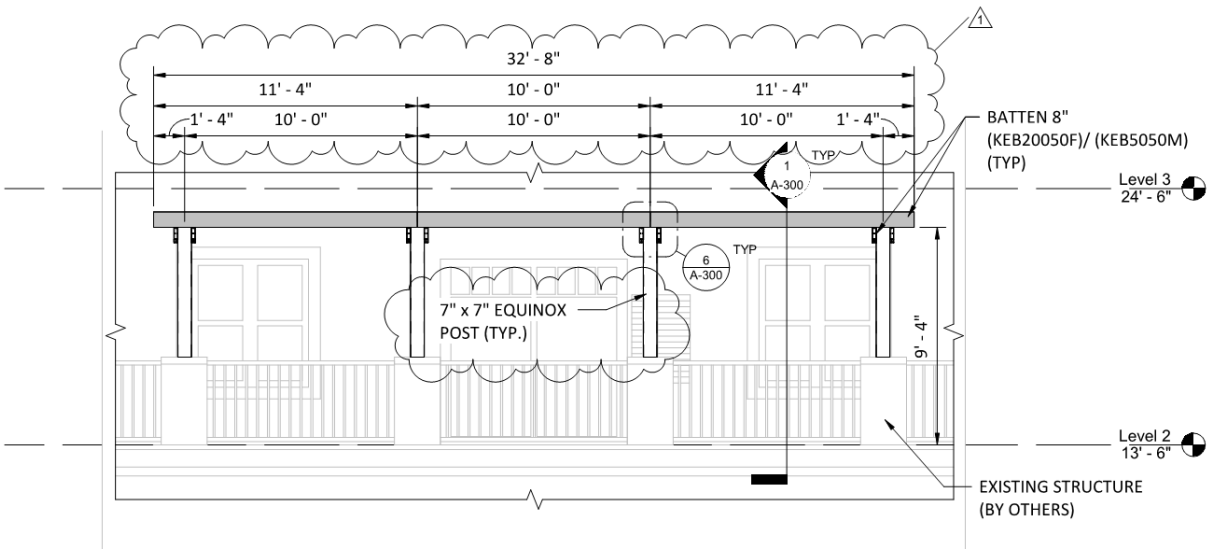


**Figure 4 - Typical Pergola Elevation View**

**Check 2x8 Batten (KEB20050F/KEB5050M - 6063-T6):**

$L_b := 16\ ft$ Max Unbraced Length

$L_{bC} := 1.5\ ft$ Max Cantilever Length

$d_b := 8\ in$ Depth of Member

$s_b := 17\ in$ Spacing of Member (effective wind width)

Loading:

$w_{DLTotal} := DL_{selfB50200} = 3.142\ plf$ Total Distributed Dead Load

$w_{LLTotal} := p_{LL} \cdot s_b = 28.333\ plf$ Total Distributed Live Load

$P_{req} = 200\ lbf$ Point Load

$w_{WLLateral} := p_{Wind} \cdot d_b = 37.6\ plf$ Ultimate Distributed Lateral Wind Load

$w_{WLUplift} := p_{WindUplift} \cdot s_b = 70.975\ plf$ Ultimate Distributed Uplift Wind Load

Max moments considering batten "pinned"

DL+LL Load Case:

$$M_{1P} := \frac{w_{DLTotal} \cdot L_b^{\,2}}{8} + \frac{P_{req} \cdot L_b}{4} = 0.901\ kip \cdot ft \qquad M_{1D} := \frac{w_{DLTotal} \cdot L_b^{\,2}}{8} + \frac{w_{LLTotal} \cdot L_b^{\,2}}{8} = 1.007\ kip \cdot ft$$

$$V_{1P} := \frac{w_{DLTotal} \cdot L_b}{2} + P_{req} = 0.225\ kip \qquad V_{1D} := \frac{w_{DLTotal} \cdot L_b}{2} + \frac{w_{LLTotal} \cdot L_b}{2} = 0.252\ kip$$

$$M_{1PC} := \frac{w_{DLTotal} \cdot L_{bC}^{\,2}}{2} + P_{req} \cdot L_{bC} = 0.304\ kip \cdot ft \qquad M_{1DC} := \frac{w_{DLTotal} \cdot L_{bC}^{\,2}}{2} + \frac{w_{LLTotal} \cdot L_{bC}^{\,2}}{2} = 0.035\ kip \cdot ft$$

$$V_{1PC} := w_{DLTotal} \cdot L_{bC} + P_{req} = 0.205\ kip \qquad V_{1DC} := w_{DLTotal} \cdot L_{bC} + w_{LLTotal} \cdot L_{bC} = 0.047\ kip$$

DL+0.75LL+0.45WL Load Case:

$$M_{2P} := \frac{0.45\ w_{WLLateral} \cdot L_b^{\,2}}{8} + \frac{0.75\ P_{req} \cdot L_b}{4} = 1.141\ kip \cdot ft \qquad M_{2D} := \frac{0.75\ w_{LLTotal} \cdot L_b^{\,2}}{8} + \frac{0.45\ w_{WLLateral} \cdot L_b^{\,2}}{8} = 1.221\ kip \cdot ft$$

$$V_{2P} := \frac{0.45\ w_{WLLateral} \cdot L_b}{2} + 0.75 \cdot P_{req} = 0.285\ kip \qquad V_{2D} := \frac{0.75\ w_{LLTotal} \cdot L_b}{2} + \frac{0.45\ w_{WLLateral} \cdot L_b}{2} = 0.305\ kip$$

$$M_{2PC} := \frac{0.45\ w_{WLLateral} \cdot L_{bC}^{\,2}}{2} + 0.75 \cdot P_{req} \cdot L_{bC} = 0.244\ kip \cdot ft \qquad M_{2DC} := \frac{0.75\ w_{LLTotal} \cdot L_{bC}^{\,2}}{2} + \frac{0.45\ w_{WLLateral} \cdot L_{bC}^{\,2}}{2} = 0.043\ kip \cdot ft$$

$$V_{2PC} := 0.45\ w_{WLLateral} \cdot L_{bC} + 0.75\ P_{req} = 0.175\ kip \qquad V_{2DC} := 0.75\ w_{LLTotal} \cdot L_{bC} + 0.45\ w_{WLLateral} \cdot L_{bC} = 0.057\ kip$$

DL+0.60WL Load Case:

$$M_3 := 0.60 \cdot \frac{w_{WLLateral} \cdot L_b^{\,2}}{8} = 0.722\ kip \cdot ft$$

$$V_3 := 0.60 \cdot \frac{w_{WLLateral} \cdot L_b}{2} = 0.18\ kip$$

$$M_{3C} := \frac{0.6\ w_{WLLateral} \cdot L_{bC}^{\,2}}{2} = 0.025\ kip \cdot ft$$

$$V_{3C} := 0.6\ w_{WLLateral} \cdot L_{bC} = 0.034\ kip$$

-0.6DL+0.60WL Load Case (Uplift):

$$M_4 := -0.6 \frac{w_{DLTotal} \cdot L_b^{\,2}}{8} + 0.60 \cdot \frac{w_{WLLateral} \cdot L_b^{\,2}}{8} = 0.662 \ \textit{kip} \cdot \textit{ft}$$

$$V_4 := -0.6 \cdot \frac{w_{DLTotal} \cdot L_b}{2} + 0.60 \cdot \frac{w_{WLLateral} \cdot L_b}{2} = 0.165 \ \textit{kip}$$

$$M_{4C} := -0.6 \frac{w_{DLTotal} \cdot L_{bC}^{\,2}}{2} + \frac{0.6 \ w_{WLLateral} \cdot L_{bC}^{\,2}}{2} = 0.023 \ \textit{kip} \cdot \textit{ft}$$

$$V_{4C} := -0.6 \cdot \frac{w_{DLTotal} \cdot L_{bC}}{2} + 0.6 \ w_{WLLateral} \cdot L_{bC} = 0.032 \ \textit{kip}$$

*Max Forces:*

$$M_{MAX} := \max\left(M_{1P}, M_{1D}, M_{1PC}, M_{1DC}, M_{2PC}, M_{2D}, M_{2PC}, M_{2DC}, M_3, M_{3C}, M_4, M_{4C}\right) = 1.221 \ \textit{kip} \cdot \textit{ft}$$

$$V_{MAX} := \max\left(V_{1P}, V_{1D}, V_{1PC}, V_{1DC}, V_{2P}, V_{2D}, V_{2PC}, V_{2DC}, V_3, V_{3C}, V_4, V_{4C}\right) = 0.305 \ \textit{kip}$$

**Check Batten Bending:**

Conservatively considered weak axis bending:

$$f_b := \frac{M_{MAX}}{S_{xB50200}} = 8.615 \ \textit{ksi} \qquad < \quad F_{ab6063} = 15.2 \ \textit{ksi} \ \therefore \ \text{OK}$$

**Check Batten Shear:**

$$f_v := \frac{V_{MAX}}{3 \cdot A_{webB50200y}} = 0.525 \ \textit{ksi} \quad < \quad F_{av2x8} = 6.325 \ \textit{ksi} \quad \therefore \ \text{OK}$$

**Therefore, use of KEB20050F/KEB5050M is Acceptable**

**Check Batten Fasteners:**

*Allowable Connection Shear:*

The allowable connection shear is determined according to Section J.5.6, which specifies a safety factor $\Omega$ = 3.0 for fastener connection shear for building-type structures.

$\Omega := 3.0$ ASD building-type structures

$D := 0.21\ in$ #12 Fastener Diameter

$t_1 := 0.1181\ in$ Part Thickness

$t_2 := 0.1181\ in$ Support Thickness

$T_{fastener} := \frac{V_{MAX}}{2} = 152.68\ lbf$ Max shear in batten taken as tension in 2 fasteners

$V_{fastener} := \frac{V_{MAX}}{2} = 152.68\ lbf$ Max shear from live load in 2 fasteners)

Section J.5.6.1 addresses bearing. Since the edge distance is 1.0 in. > 0.38 in. = 2(0.19in.) = 2D, the allowable bearing force is 2FtuDt/W. Using Ftu from Table A.3.4, the allowable shear for bearing is:

$F_{tu} := 30\ ksi$ $F_{ty} := 25\ ksi$ (Table A.3.4 - 6063-T6 aluminum at minimum)

$F_{bearing} := \frac{2 \cdot F_{tu} \cdot D \cdot t_1}{\Omega} = 496.02\ lbf$ > $V_{fastener} = 153\ lbf$ ∴ OK

*Fastener Pull Over:*

Nominal Pull-over Strength per ADM (Using #10 hex washer head at Minimum):

$R_{nov} := 1.0 \cdot t_1 \cdot F_{tu} \cdot (0.414\ in - 0.147\ in) = 945.981\ lbf$ (ADM Eq. J.5-8)

Allowable Pull-over Strength:

$F_{pullover} := \frac{R_{nov}}{\Omega} = 315.327\ lbf$ > $T_{fastener} = 152.68\ lbf$ ∴ OK

*Fastener Shear:*

$F_{vu} := 2\ kip$ #12 Ultimate Shear

$F_{shear} := \frac{F_{vu}}{\Omega} = 666.667\ lbf$ > $V_{fastener} = 153\ lbf$ ∴ OK

*Fastener Tension:*

Nominal Pullout (ADM J.5.5)

$D = 0.21\ in$ Nominal diameter of screw

$L_e := t_2 = 0.118\ in$ Screw engaged length

$R_n := 1.2 \cdot D \cdot L_e \cdot F_{ty} = 744\ lbf$ (#12 Ultimate Pullout - ADM Eq. J.5-1)

$F_{pullout} := \frac{R_n}{\Omega} = 248.01\ lbf$ > $T_{fastener} = 153\ lbf$ ∴ OK

**Therefore, use of (2) #12 Screws is acceptable**

**Check Thermal Expansion of Batten:**

Check the forces induced by change in temperature onto the fasteners along the longest span of the member.

$\Delta_t := 50 \quad °F$ Max change in temperature considered.

$\alpha := 0.0000142 \ \frac{in}{in} \ / °F$ Aluminum Thermal Expansion Coefficient

$E_A := 10100 \ ksi$ Aluminum Young's Modulus (6063-T6 Alloys)

$L_O := L_b = 16 \ ft$ Length of Member (Considering Max Span Length)

$n := 6$ Number of Fasteners

Find change in length from temperature change:

$\Delta_l := \alpha \cdot \Delta_t \cdot L_O = 0.136 \ in$ Linear expansion due to change in temperature

Determine stress produced from length change:

$$\sigma_t := E_A \cdot \frac{\Delta_l}{L_O} = 7.171 \ ksi$$

Axial force produced from temperature change:

Note, force calculation below assumes completely rigid support to achieve max thermal forces in batten. This is a conservative assumption, as support of this member will deflect before max forces are achieved.

$A_{5050M} := 342 \ mm^2 = 0.53 \ in^2$ Cross Sectional Area Restrained by Fasteners (KEB5050M area used)

$F_t := \sigma_t \cdot A_{5050M} = 3.801 \ kip$

$F_{vu} = 2 \ kip$ (#12 Ultimate Shear) $\Omega = 3$ ASD Safety Factor for Fasteners

$$F_{shear} := \frac{F_{vu}}{\Omega} = 0.667 \ kip > \frac{F_t}{n} = 0.63 \ kip \quad \therefore = \text{“OK”}$$

**Therefore, use of (8) #12 Screws is acceptable**

**Check Batten Deflection:**

Check deflection considering a maximum of l/60 per IBC Table 1604.3 for aluminum structural members not supporting edge of glass or aluminum sandwich panels:

$$\Delta_{LL2x8} := \frac{P_{req} \cdot d_b^{\,3}}{48 \cdot E \cdot I_{xB50200}} = 0.0001 \ in < \frac{d_b}{60} = 0.133 \ in$$

**Therefore, use of KEB20050F & KEB5050M is Acceptable**

**Check Equinox Posts:**

**Check worst case post:**

$d_{post} := 11.25\ ft$ (Max tributary area on single post)

$h_{post} := 9.33\ ft$ (Max height of post considered)

The pergola is modeled in RAM Elements to find the most accurate forces in the posts and base reactions at the post base. See the following figures for details.

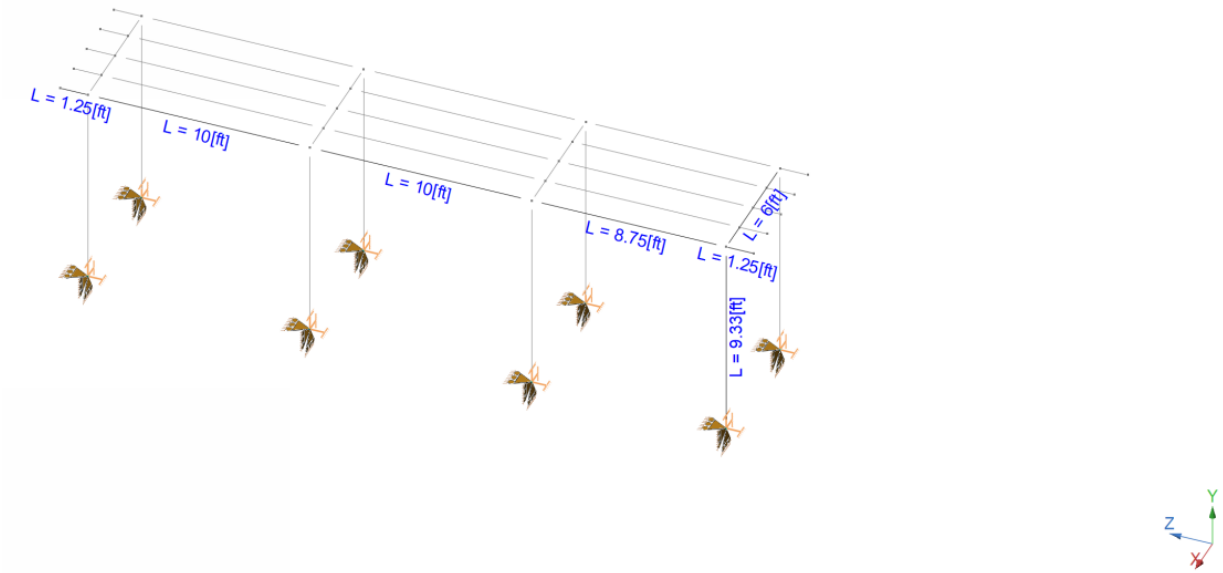


**Figure 5 - RAM Elements Model**

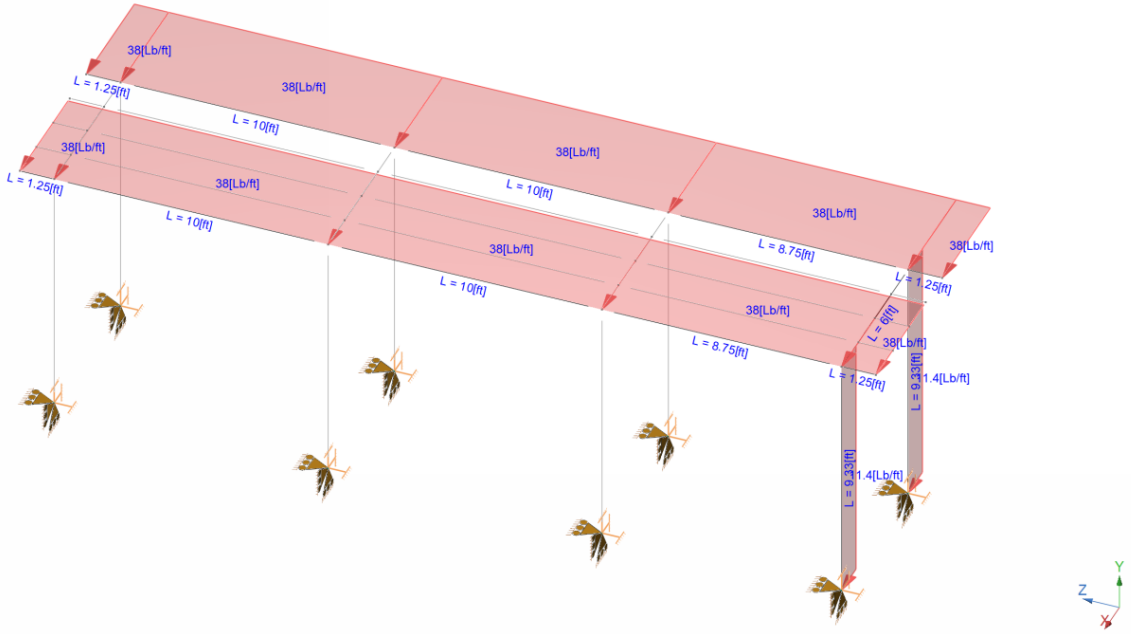


**Figure 6 - RAM Elements Typical Wind Loading X (Dead load not shown for clarity)**

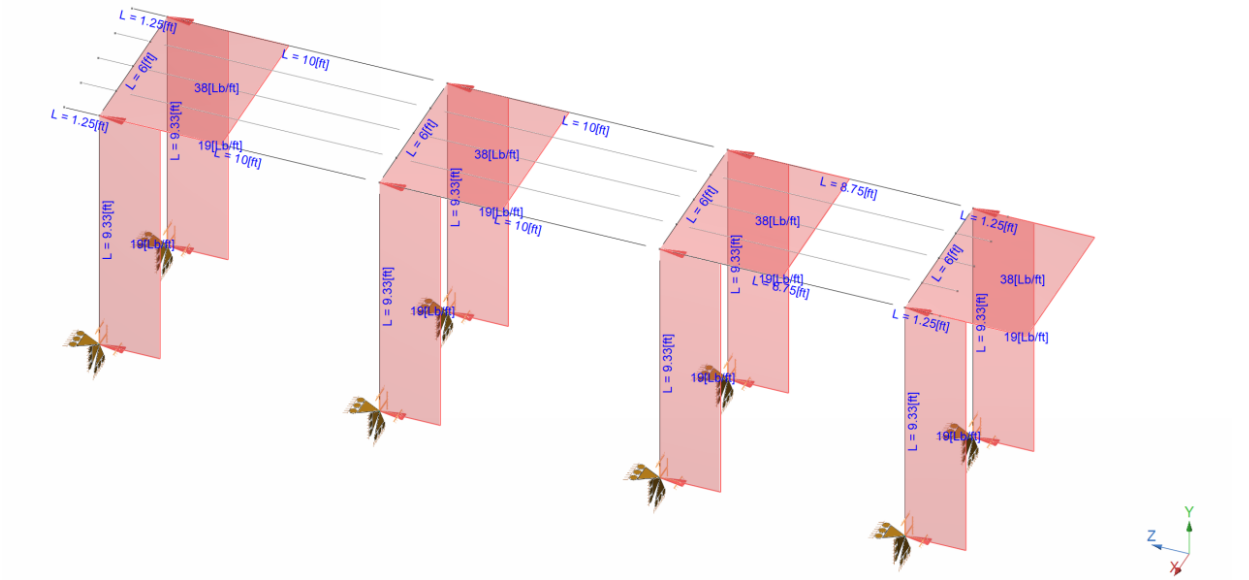


**Figure 7 - RAM Elements Typical Wind Loading Z (Dead load not shown for clarity)**

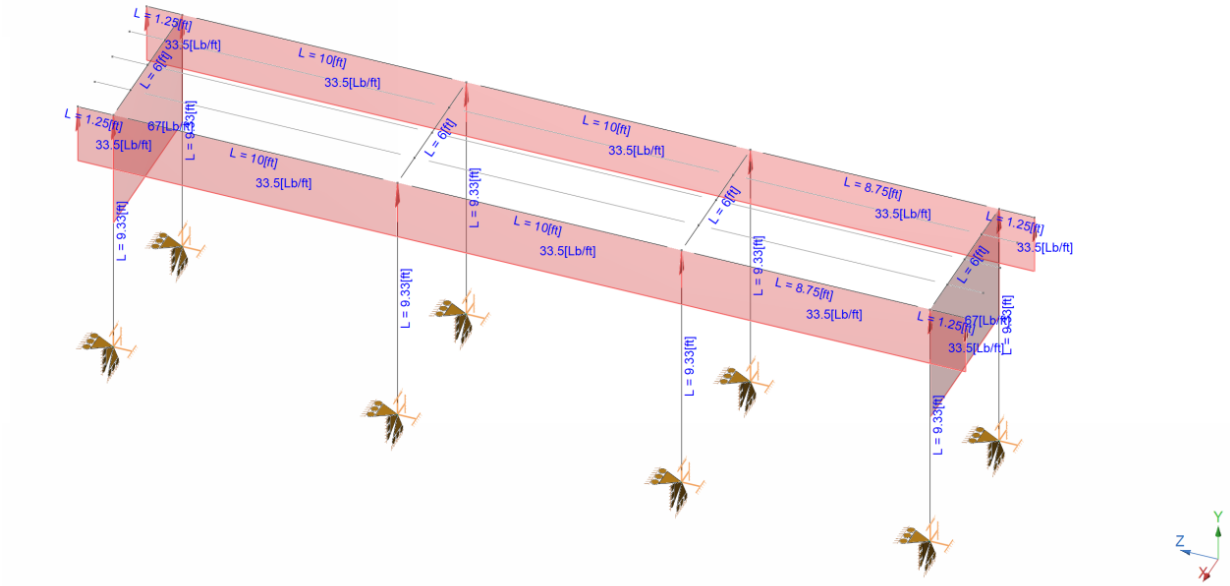


**Figure 8 - RAM Elements Typical Wind Uplift (Applied to all Battens - Limited Battens Shown for Clarity)**

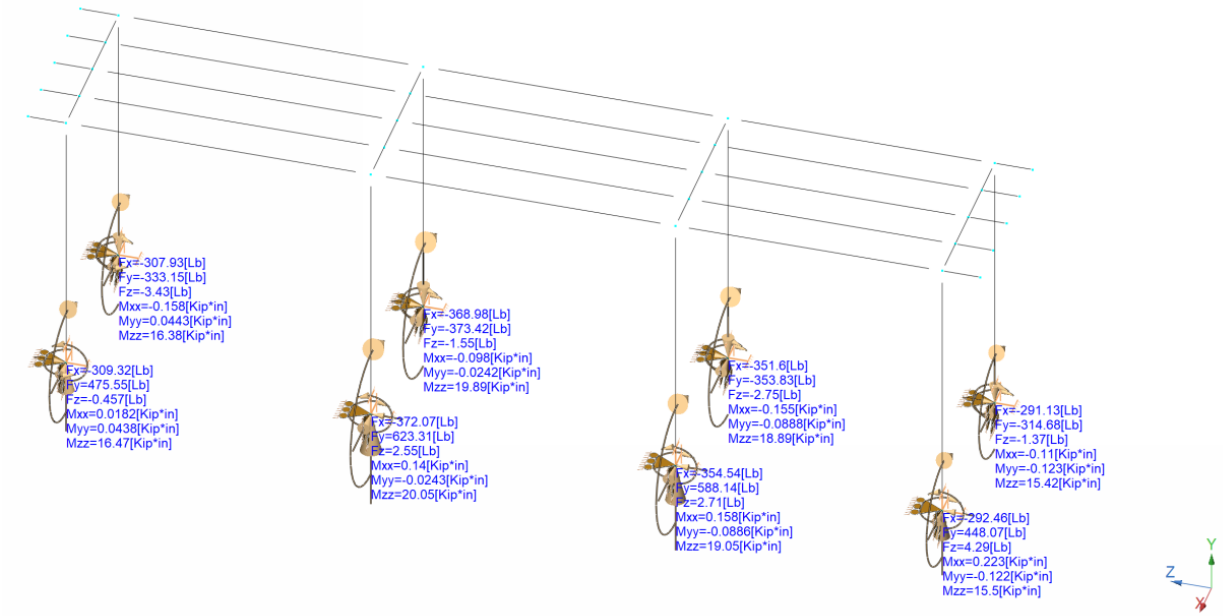


**Figure 9 - RAM Elements Worst Case Reactions (DL+0.6WLX Shown)**

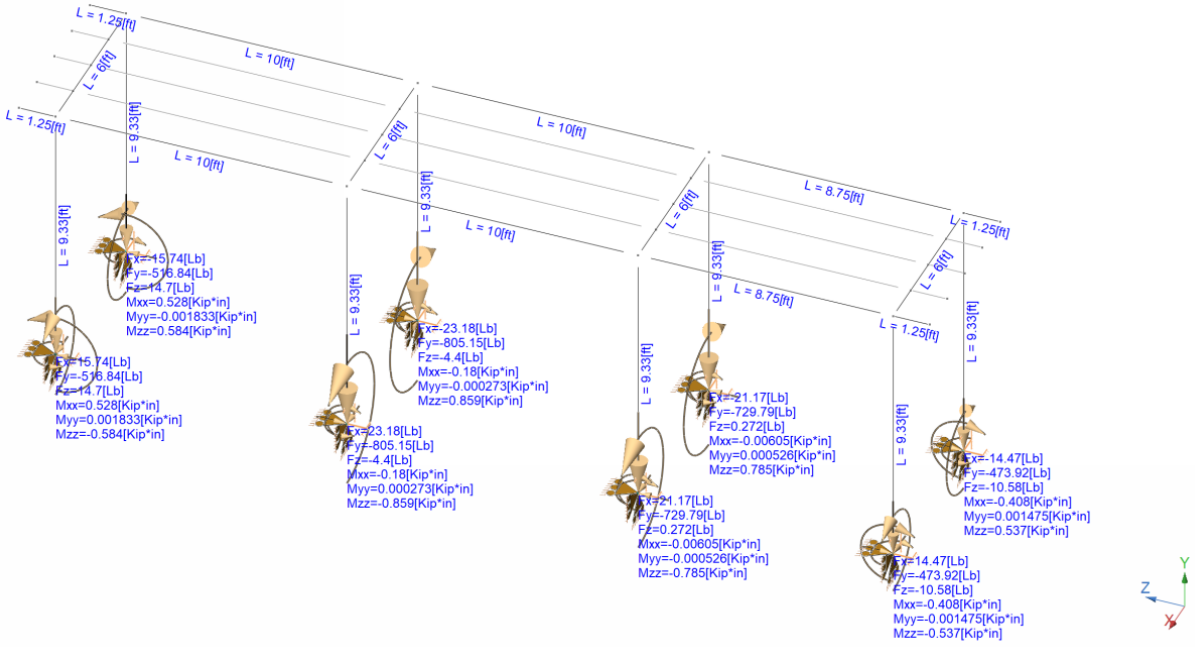


**Figure 10 - RAM Elements Worst Case Reactions (0.6DL+0.6WLY - Uplift Load Case)**

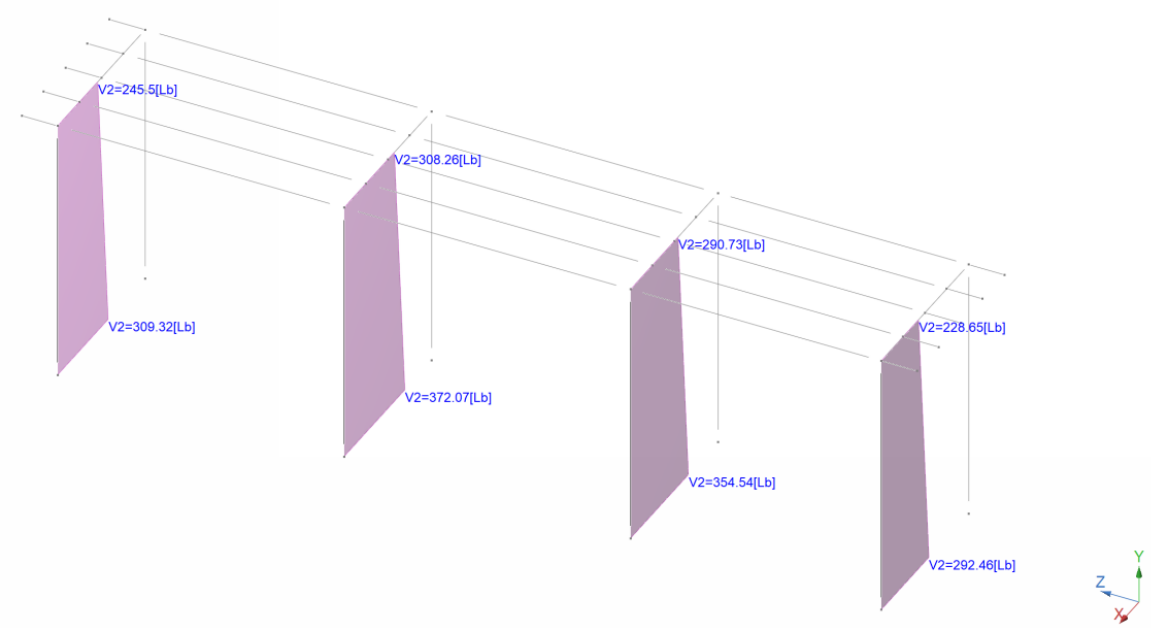


**Figure 11 - RAM Elements Worst Case Post Shear (DL+0.6WLX Shown)**

DL+0.6WL Load Case (Found Per RAM Elements):

$M_{MAX3} := 20\ \textit{kip} \cdot \textit{in}$ (Moment to be resisted by embedment of post in concrete)

$T_{MAX3} := 625\ \textit{lbf}$ (Tension Load - Uplift Load Case Only)

$V_{MAX3} := 375\ \textit{lbf}$ (Shear Load)

**Check Post Bending:**

$$F_{crpost} := \frac{M_{MAX3}}{S_{x7x7EP}} = 1.505\ \textit{ksi} \quad < \quad F_{ab6061} = 19.5\ \textit{ksi} \qquad \therefore = \text{“OK”}$$

**Check Post Shear:**

$A_{vP} := 7\ \textit{in} \cdot t_{w7x7EP} = 1.631\ \textit{in}^2$

$$F_{vpost} := \frac{V_{MAX3}}{2 \cdot A_{vP}} = 0.115\ \textit{ksi} \quad < \quad F_{av4x4} = 12.7\ \textit{ksi} \qquad \therefore = \text{“OK”}$$

**Therefore, use of 7x7 Equinox Post 6061-T6 is Acceptable**

**Check Post To Sleeve Bolts:**

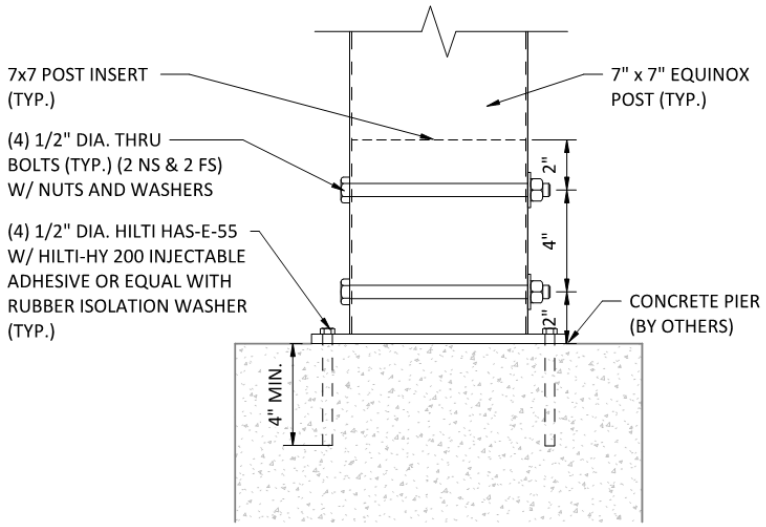


**Figure 12 - Typical Bolt Configuration**

Bolt Properties (Consider 1/2" ASTM A307 galvanized thru-bolt):

$d_b := 0.5\ in$ $A_{bolt} := \pi \cdot \left(\frac{d_b}{2}\right)^2 = 0.196\ in^2$ $F_{nt} := 45\ ksi$ $F_{nv} := 27\ ksi$

$s_b := 4\ in$

$Shear_{Allow} := \frac{F_{nv} \cdot A_{bolt}}{2} = 2.651\ kip$ (Allowable Bolt Shear) $n := 4$ (Number of Bolts Total)

Design Loads:

Worst case shear load on single bolt (from Overturn Condition):

$V_{Bolt} := \frac{M_{MAX3}}{s_b \cdot \frac{n}{2}} + \frac{V_{MAX3}}{n} = 2.594\ kip$ (Moment converted to shear through single bolt row)

Check Shear on Bolt:

$Shear_{Allow} = 2.651\ kip > V_{Bolt} = 2.59\ kip$

∴ ***Use (4)*** **1/2" A307 galvanized thru-bolts in post**

**Check Anchor Bolts:**

See Appendix A for HILTI PROFIS output showing 1/2" diameter Hilti anchors are acceptable.

**Check Aluminum Base Plate**

Check Bending of Plate

$t_{plate} := 0.5\ in$ $w_{plate} := 10.25\ in$ $z := 1.5\ in$ (Bolt Center to HSS wall)

$P := 2 \cdot T_{Bolt} = 3.636\ kip$ (Max resulting tension force)

$M := P \cdot z = 5.455\ kip \cdot in$

$S := \frac{\left(w_{plate} \cdot t_{plate}^{2}\right)}{6} = 0.427\ in^3$

$f_b := \frac{M}{S} = 12.772\ ksi$ $<$ $F_{ab6061} = 19.5\ ksi$ $\therefore$ O.K.

**Therefore, Use 1/2" Thick x 10-1/4"x10-1/4" 6061-T6 Aluminum Plate.**

**Check Aluminum Bracket:**

**Check worst case bracket:**

The bracket is modeled in RAM Elements to find the most accurate forces in the posts and base reactions at the post base. See the following figures for details.

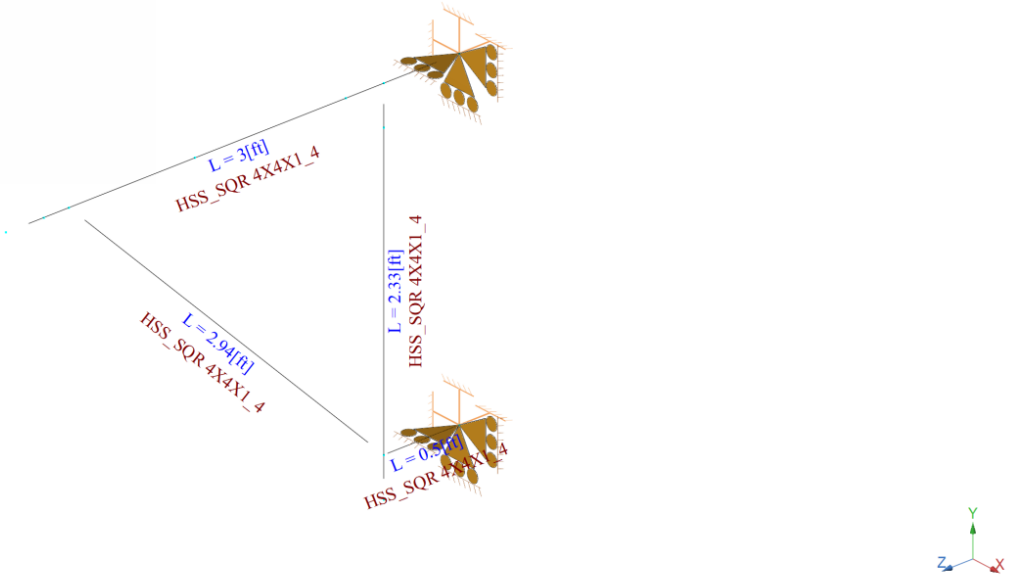


**Figure 13 - RAM Elements Model**

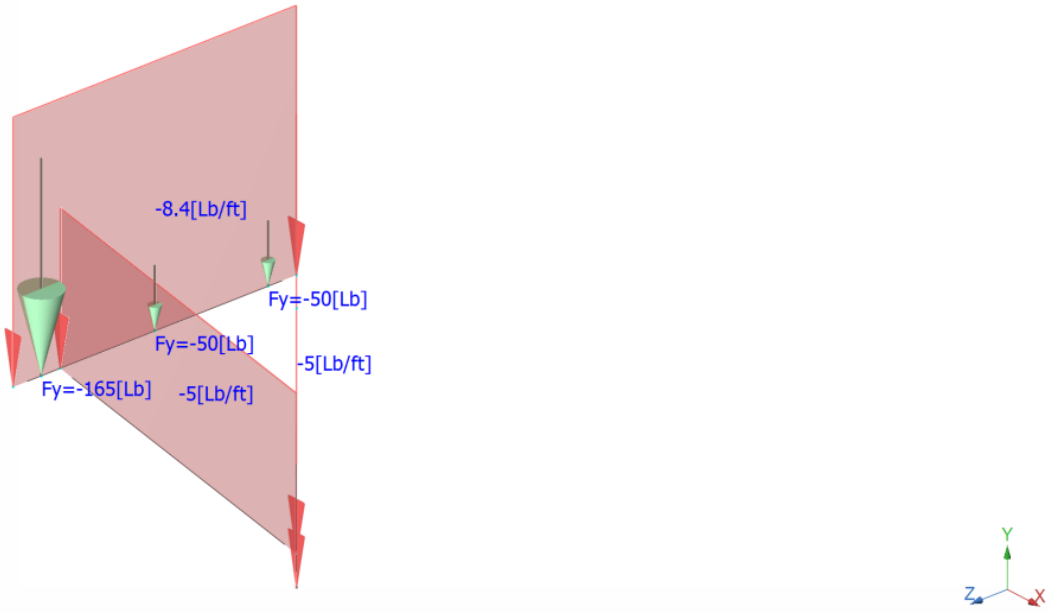


**Figure 14 - RAM Elements Model**

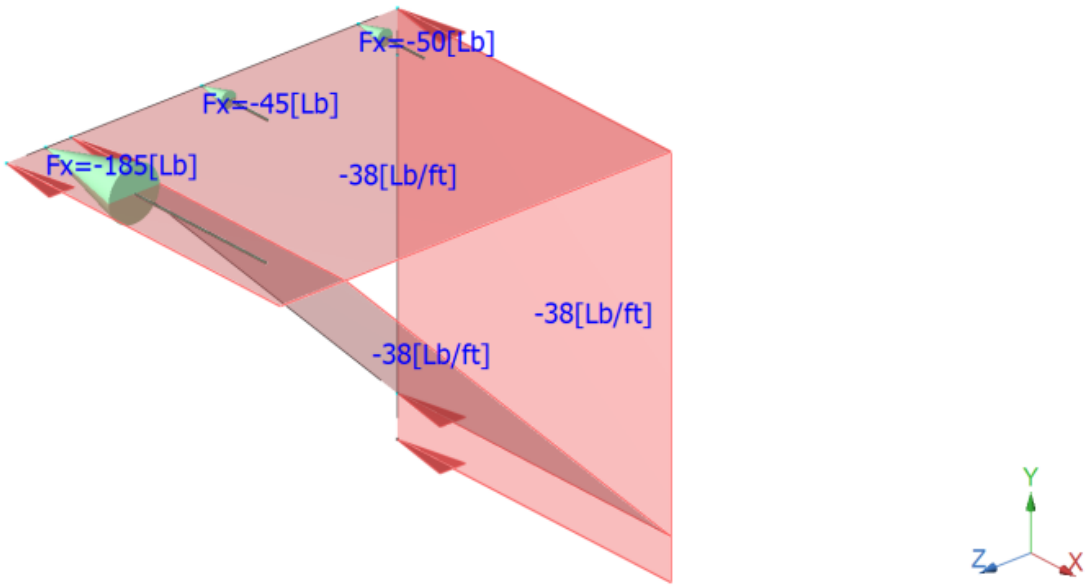


**Figure 15 - RAM Elements Bracket Wind Loading X**

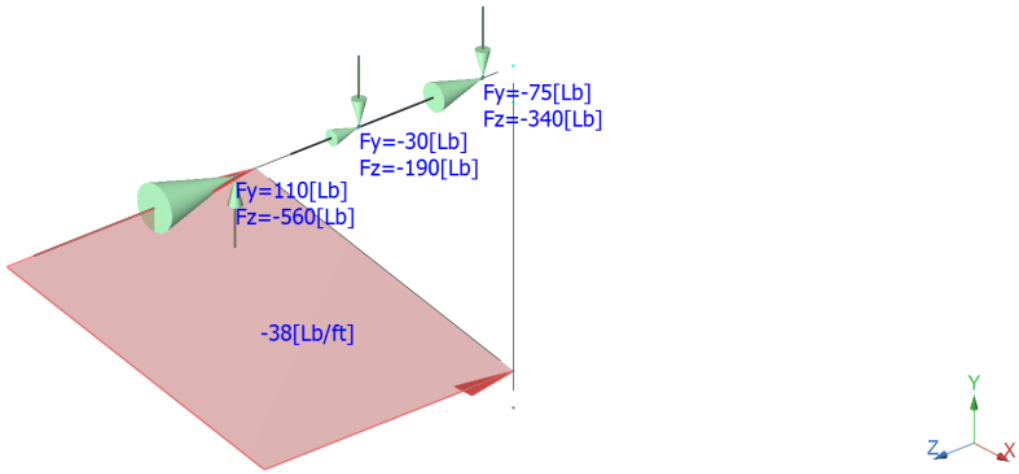


**Figure 16 - RAM Elements Bracket Wind Loading Z**

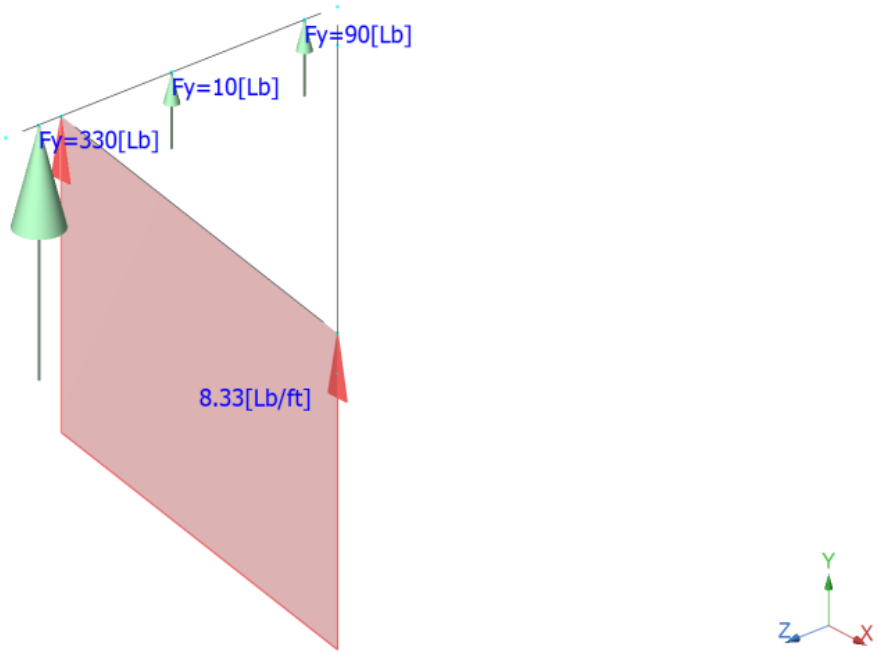


**Figure 17 - RAM Elements Bracket Wind Uplift**

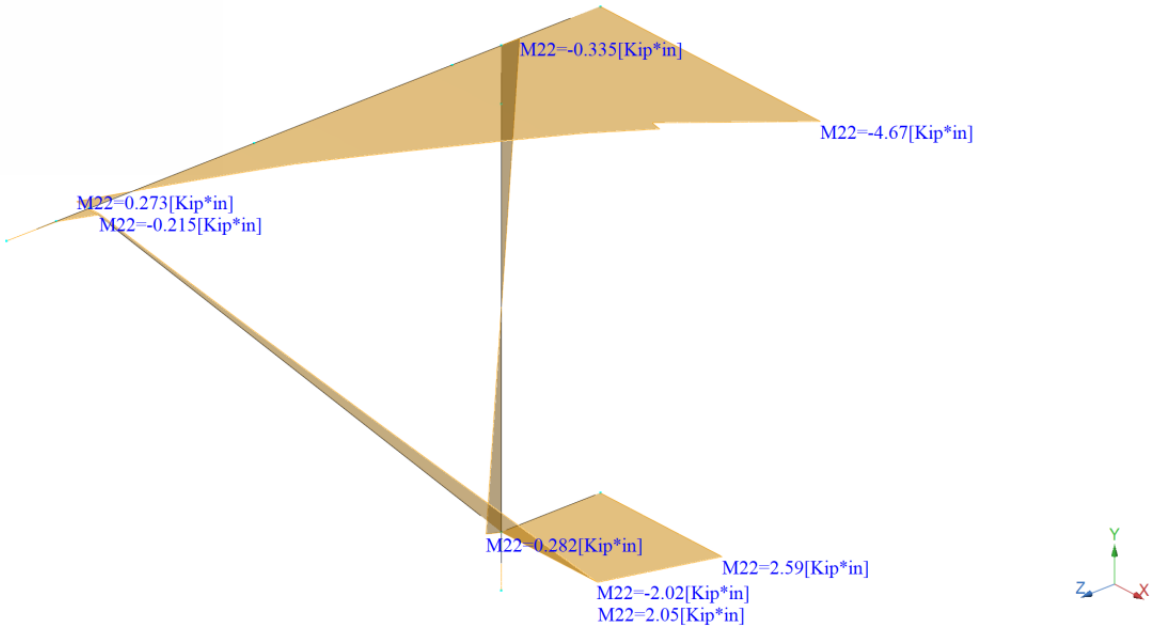


**Figure 18 - RAM Elements Bracket Max Moments (DL+0.6WLX Shown)**

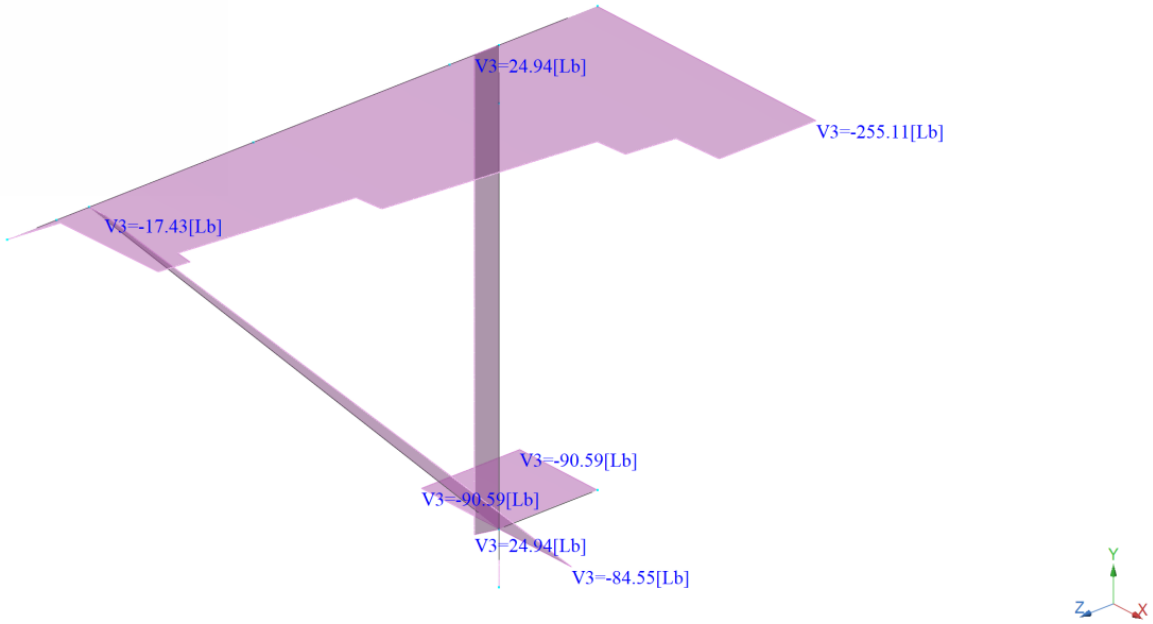


**Figure 19 - RAM Elements Bracket Max Shear (DL+0.6WLX Shown)**

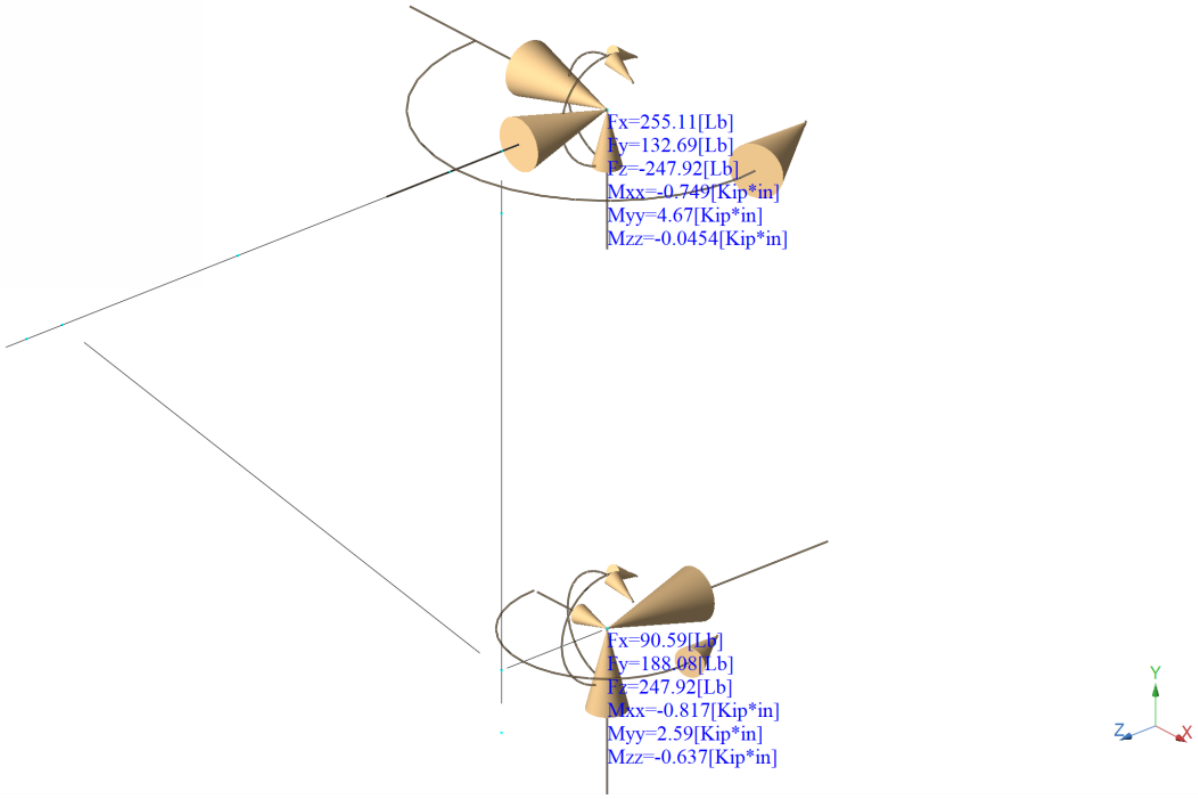


**Figure 20 - RAM Elements Worst Case Reactions (DL+0.6WLX Shown)**

DL+0.6WL Load Case (Found Per RAM Elements):

$M_{MAX4} := 4.7\ \textbf{\textit{kip}} \cdot \textbf{\textit{in}}$ (Max Moment)

$V_{MAX4} := 270\ \textbf{\textit{lbf}}$ (Max Shear Load)

The bracket is a custom welded shape consisting of welded 4x4 tubes. For conservatism, the section properties of the Knotwood 4x4 post are used to check bracket strength. Note, as this will be welded, ADM Table 2-19W is used instead for checking worst case bending and shear in an aluminum welded zone.

**Check Post Bending:**

$$F_{crpost} := \frac{M_{MAX4}}{S_{x100100}} = 2.112\ \textbf{\textit{ksi}} \quad < \quad F_{ab6061w} := 9.1\ \textbf{\textit{ksi}} \qquad \therefore = \text{“OK”}$$

**Check Post Shear:**

$A_{vP} := 4\ \textbf{\textit{in}} \cdot 0.125\ \textbf{\textit{in}} = 0.5\ \textbf{\textit{in}}^2$

$$F_{vpost} := \frac{V_{MAX4}}{2 \cdot A_{vP}} = 0.27\ \textbf{\textit{ksi}} \quad < \quad F_{av4x4w} := 5.5\ \textbf{\textit{ksi}} \qquad \therefore = \text{“OK”}$$

**Check Bracket Connection:**

**Check worst case:**

The bracket reactions from the RAM model above are used to check the fasteners for the bracket. The figures below show the fastener layout checked.

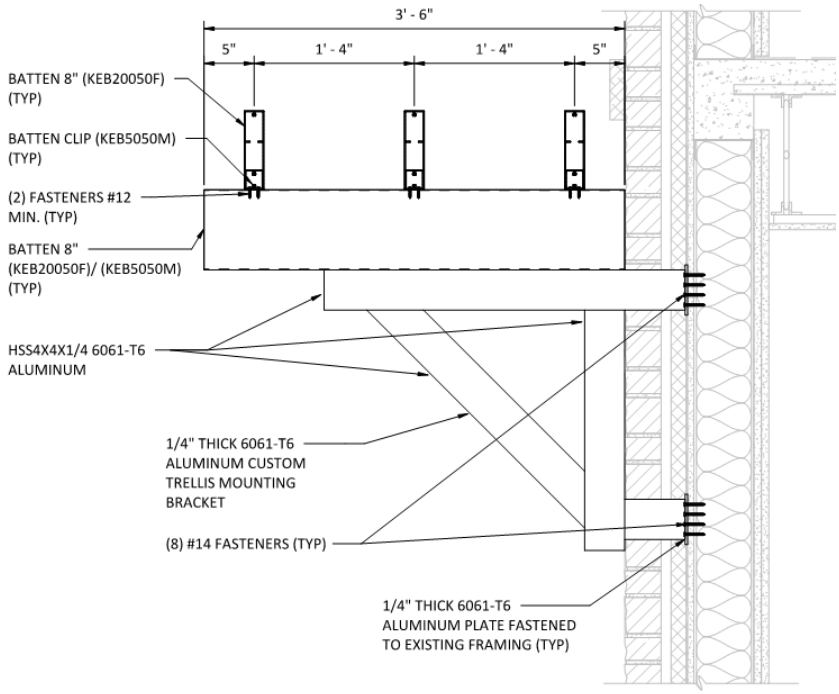


**Figure 21 - Aluminum Bracket Section View**

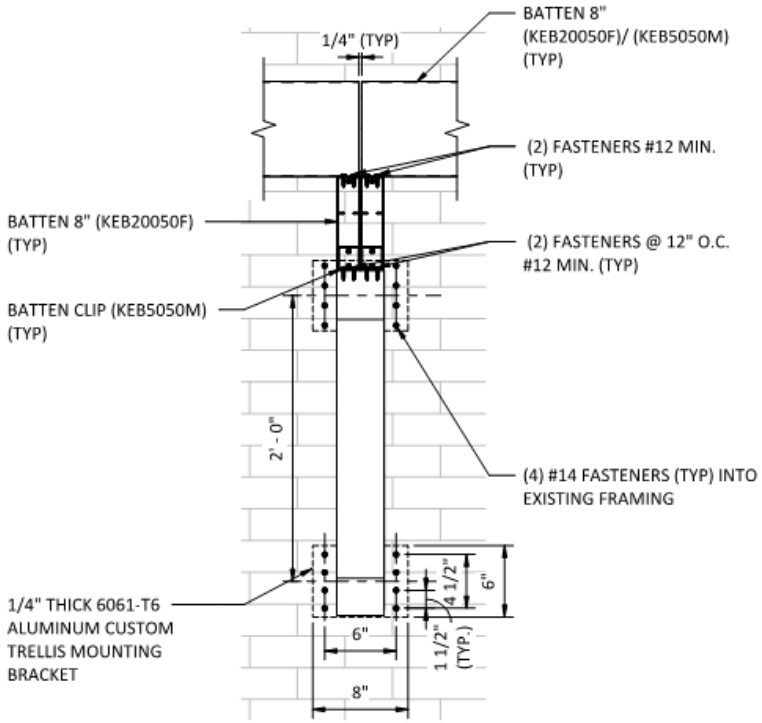


**Figure 22 - Aluminum Bracket Elevation View**

RAM Reactions:

$F_x := 255\ \textit{lbf}$ $M_x := 0.75\ \textit{kip} \cdot \textit{in}$

$F_y := 133\ \textit{lbf}$ $M_y := 4.67\ \textit{kip} \cdot \textit{in}$

$F_z := 250\ \textit{lbf}$ $M_z := 0.05\ \textit{kip} \cdot \textit{in}$

$s_y := 3\ \textit{in}$ (Vertical Spacing between Fastener Rows)

$s_x := 6\ \textit{in}$ (Horizontal Spacing between Fastener Columns)

$n := 4$ (Number of Fasteners per Connection)

RAM Forces Converted to Fastener Forces:

$T_{fastener} := \frac{F_z}{2\ n} + \frac{M_x}{n\ s_y} + \frac{M_y}{n \cdot s_x} = 0.288\ \textit{kip}$ Max tension per fastener

$V_{fastener} := \frac{\sqrt{\left(F_y + \frac{M_z}{s_x}\right)^2 + {F_x}^2}}{n} = 0.073\ \textit{kip}$ Max shear per fastener

*Allowable Connection Shear:*

The allowable connection shear is determined according to Section J.5.6, which specifies a safety factor $\Omega$ = 3.0 for fastener connection shear for building-type structures.

$\Omega := 3.0$ ASD building-type structures

$D := 0.25\ \textit{in}$ #14 Fastener Diameter

$t_1 := 0.25\ \textit{in}$ Part Thickness

$t_2 := 0.0625\ \textit{in}$ Support Thickness (Assuming 16 gauge 50 ksi metal studs)

Section J.5.6.1 addresses bearing. Since the edge distance is 1.0 in. > 0.38 in. = 2(0.19in.) = 2D, the allowable bearing force is 2FtuDt/W. Using Ftu from Table A.3.4, the allowable shear for bearing is:

$F_{tu} := 30\ \textit{ksi}$ $F_{ty} := 25\ \textit{ksi}$ (Table A.3.4 - 6063-T6 aluminum at minimum)

$F_{bearing} := \frac{2 \cdot F_{tu} \cdot D \cdot t_1}{\Omega} = 1.25\ \textit{kip}$ > $V_{fastener} = 73\ \textit{lbf}$ ∴ OK

*Fastener Pull Over:*

Nominal Pull-over Strength per ADM (Using #10 hex washer head at Minimum):

$R_{nov} := 1.0 \cdot t_1 \cdot F_{tu} \cdot (0.414\ \textit{in} - 0.147\ \textit{in}) = 2.003\ \textit{kip}$ (ADM Eq. J.5-8)

Allowable Pull-over Strength:

$F_{pullover} := \frac{R_{nov}}{\Omega} = 667.5\ \textit{lbf}$ > $T_{fastener} = 288.333\ \textit{lbf}$. OK

*Fastener Shear:*

$F_{vu} := 2\ \textbf{kip}$ #12 Ultimate Shear

$F_{shear} := \frac{F_{vu}}{\Omega} = 666.667\ \textbf{lbf} > V_{fastener} = 75\ \textbf{lbf}$ $\therefore$ OK

*Fastener Tension:*

Nominal Pullout (ADM J.5.5)

$D = 0.25\ \textbf{in}$ Nominal diameter of screw

$L_e := t_2 = 0.063\ \textbf{in}$ Screw engaged length (Assuming 16 gauge steel min.)

$F_{ty2} := 50\ \textbf{ksi}$ Tensile yield strength of member not in contact with screw head

$R_n := 1.2 \cdot D \cdot L_e \cdot F_{ty2} = 938\ \textbf{lbf}$ (#14 Ultimate Pullout - ADM Eq. J.5-1)

$F_{pullout} := \frac{R_n}{\Omega} = 312.5\ \textbf{lbf} > T_{fastener} = 280\ \textbf{lbf}$ $\therefore$ OK

**Therefore, use of (4) #14 Screws is acceptable**

*Fastener Shear:*

$F_{vu} := 2\ \textbf{kip}$ #12 Ultimate Shear

$F_{shear} := \frac{F_{vu}}{\Omega} = 666.667\ \textbf{lbf} > V_{fastener} = 75\ \textbf{lbf}$ $\therefore$ OK

*Fastener Tension:*

Nominal Pullout (ADM J.5.5)

$D = 0.25\ \textbf{in}$ Nominal diameter of screw

$L_e := t_2 = 0.063\ \textbf{in}$ Screw engaged length (Assuming 16 gauge steel min.)

$F_{ty2} := 50\ \textbf{ksi}$ Tensile yield strength of member not in contact with screw head

$R_n := 1.2 \cdot D \cdot L_e \cdot F_{ty2} = 938\ \textbf{lbf}$ (#14 Ultimate Pullout - ADM Eq. J.5-1)

$F_{pullout} := \frac{R_n}{\Omega} = 312.5\ \textbf{lbf} > T_{fastener} = 280\ \textbf{lbf}$ $\therefore$ OK

**Therefore, use of (4) #14 Screws is acceptable**

# APPENDIX ‘A’
# (TECHNICAL & PRODUCT DATA SHEETS)

Please be advised, the product data sheets contained in this appendix are included in this submission for their load capacities only, which are referenced in the attached calculations. PVE does not mandate that the contractor must use the exact products manufactured by the companies listed on said product data sheets. The contractor may substitute for any of the products contained in this appendix provided that the substituted products are equivalent or better than those listed in this appendix

# Table 2-19
# ALLOWABLE STRESSES FOR BUILDING-TYPE STRUCTURES (UNWELDED)

| Allowable Stresses $F/\Omega$ (k/in²) | Section | $F/\Omega$ | 6061 – T6, T6510, T6511 Extrusions<br>6061 – T6 Pipe<br>6351 - T5 Extrusions |
|---|---|---|---|
| Axial Tension | | | |
| axial tension stress on net effective area | D.2b | 19.5 | $F_{ty}$ = 35 k/in² |
| axial tension stress on gross area | D.2a | 21.2 | $F_{cy}$ = 35 k/in²<br>$F_{tu}$ = 38 k/in² |
| | | | $E$ = 10,100 k/in²<br>$k_t$ = 1 |

| Flexure | | Tension | Compression | |
|---|---|---|---|---|
| elements in uniform stress | F.8.1.1 | 19.5 | see B.5.4.1 thru B.5.4.5 and E.4.2 | |
| elements in flexure | F.8.1.2, F.4.1 | 27.6 | 27.6 | see also F.4.2 |
| round tubes | F.6.1 | 24.2 | 24.8 | see also F.6.2 |
| rods | F.7 | 27.6 | 27.6 | |
| Bearing | | | | |
| bolts or rivets on holes | J.3.7a, J.4.7 | 39.0 | | |
| bolts on slots, pins on holes, flat surfaces | J.3.7b, J.7 | 25.9 | | |

| Axial Compression | | Slenderness $S$ | $F/\Omega$ for $S \le S_1$ | $S_1$ | $F/\Omega$ for $S_1 < S < S_2$ | $S_2$ | $F/\Omega$ for $S \ge S_2$ |
|---|---|---|---|---|---|---|---|
| all shapes member buckling | E.3 | $kL/r$ | | | 20.3 – 0.127 S | 66 | 51,352 /$S^2$ |
| Flexural Compression | | | | | | | |
| open shapes lateral-torsional buckling | F.2.1 | $L_b/(r_{ye}C_b^{1/2})$ | | | 23.9 – 0.124 $S$ | 79 | 86,996 /$S^2$ |
| closed shapes lateral-torsional buckling | F.3.1 | $2L_bS_c/(C_b(I_yJ)^{1/2})$ | | | 23.9 – 0.238 $S^{1/2}$ | 1685 | 23,599 /$S$ |
| rectangular bars lateral-torsional buckling | F.4.2 | $(d/t)(L_b/(C_bd))^{1/2}$ | | | 40.5 – 0.928 $S$ | 29 | 11,420 /$S^2$ |
| round tubes local buckling | F.6.2 | $R_b/t$ | 39.3 – 2.702 $S^{1/2}$ | 55 | 26.2 – 0.944 $S^{1/2}$ | 141 | 3,776 /[$S$(1+$S^{1/2}$/35)²] |
| Elements—Uniform Compression | | | | | | | |
| flat elements supported on one edge in columns whose buckling axis is not an axis of symmetry | B.5.4.1 | $b/t$ | 21.2 | 6.7 | 27.3 – 0.910 $S$ | 12 | 2,417 /$S^2$ |
| flat elements supported on one edge in all other columns and all beams | B.5.4.1 | $b/t$ | 21.2 | 6.7 | 27.3 – 0.910 $S$ | 10.5 | 186 /$S$ |
| flat elements supported on both edges | B.5.4.2 | $b/t$ | 21.2 | 20.8 | 27.3 – 0.291 $S$ | 33 | 580 /$S$ |
| flat elements supported on both edges and with an intermediate stiffener | B.5.4.4 | $\lambda_s$ | 21.2 | 17.8 | 23.9 – 0.149 $S$ | 66 | 60,414 /$S^2$ |
| curved elements supported on both edges | B.5.4.5 | $R_b/t$ | 21.2 | 27.6 | 26.2 – 0.944 $S^{1/2}$ | 141 | 3,776 /[$S$(1+$S^{1/2}$/35)²] |
| flat elements—alternate method | B.5.4.6 | $\lambda_{eq}$ | 21.2 | 33.3 | 27.3 – 0.182 $S$ | 52 | 928 /$S$ |
| Elements—Flexural Compression | | | | | | | |
| flat elements supported on both edges | B.5.5.1 | $b/t$ | 27.6 | 49.3 | 40.5 – 0.262 $S$ | 77 | 1,563 /$S$ |
| flat elements supported on tension edge, compression edge free | B.5.5.2 | $b/t$ | 27.6 | 9.2 | 40.5 – 1.412 $S$ | 19 | 4,932 /$S^2$ |
| flat elements supported on both edges and with a longitudinal stiffener | B.5.5.3 | $b/t$ | 27.6 | 110.5 | 40.5 – 0.117 $S$ | 173 | 3,502 /$S$ |
| flat elements—alternate method | B.5.5.4 | $\lambda_{eq}$ | 27.6 | 32.0 | 40.5 – 0.403 $S$ | 50 | 1,016 /$S$ |
| Elements—Shear | | | | | | | |
| flat elements supported on both edges | G.2 | $b/t$ | 12.7 | 35.3 | 16.5 – 0.107 $S$ | 63 | 38,665 /$S^2$ |

# Table 2-19W
# ALLOWABLE STRESSES FOR BUILDING-TYPE STRUCTURES (WELDED)

| Allowable Stresses $F/\Omega$ (k/in²) | Section | $F/\Omega$ | 6061 – T6, T6510, T6511 | All Products (See note) |
|---|---|---|---|---|
| Axial Tension | | | $F_{ty}$ = 15 k/in² | $E$ = 10,100 k/in² |
| axial tension stress on net effective area | D.2b | 12.3 | $F_{cy}$ = 15 k/in² | $k_t$ = 1 |
| axial tension stress on gross area | D.2a | 9.1 | $F_{tu}$ = 24 k/in² | |

| Flexure | | Tension | Compression | |
|---|---|---|---|---|
| elements in uniform stress | F.8.1.1 | 9.1 | see B.5.4.1 thru B.5.4.5 and E.4.2 | |
| elements in flexure | F.8.1.2, F.4.1 | 11.8 | 11.8 see also F.4.2 | |
| round tubes | F.6.1 | 10.6 | 10.6 see also F.6.2 | |
| rods | F.7 | 11.8 | 11.8 | |

**Note:**
**Welded with 5183, 5356, or 5556, or Welded with 4043, 5554, or 5654 and ≤0.375" thick**

| Bearing | | |
|---|---|---|
| bolts or rivets on holes | J.3.7a, J.4.7 | 24.6 |
| bolts on slots, pins on holes, flat surfaces | J.3.7b, J.7 | 16.4 |

| Axial Compression | | Slenderness $S$ | $F/\Omega$ for $S \le S_1$ | $S_1$ | $F/\Omega$ for $S_1 < S < S_2$ | $S_2$ | $F/\Omega$ for $S \ge S_2$ |
|---|---|---|---|---|---|---|---|
| all shapes member buckling | E.3 | $kL/r$ | | | 8.7 – 0.043 $S$ | 133 | 51,352 /$S^2$ |
| Flexural Compression | | | | | | | |
| open shapes lateral-torsional buckling | F.2.1 | $L_b/(r_{ye}C_b^{1/2})$ | | | 10.2 – 0.043 $S$ | 160 | 86,996 /$S^2$ |
| closed shapes lateral-torsional buckling | F.3.1 | $2L_bS_c/(C_b(I_yJ)^{1/2})$ | | | 10.2 – 0.082 $S^{1/2}$ | 6943 | 23,599 /$S$ |
| rectangular bars lateral-torsional buckling | F.4.2 | $(d/t)(L_b/(C_bd))^{1/2}$ | | | 16.0 – 0.230 $S$ | 46 | 11,420 /$S^2$ |
| round tubes local buckling | F.6.2 | $R_b/t$ | 17.7 – 0.933 $S^{1/2}$ | 121 | 11.8 – 0.396$S^{1/2}$ | 390 | 3,776 /[$S$(1+$S^{1/2}$/35)²] |
| Elements—Uniform Compression | | | | | | | |
| flat elements supported on one edge in columns whose buckling axis is not an axis of symmetry | B.5.4.1 | $b/t$ | 9.1 | 9.0 | 12.0 – 0.327 $S$ | 25 | 2,417 /$S^2$ |
| flat elements supported on one edge in all other columns and all beams | B.5.4.1 | $b/t$ | 9.1 | 9.0 | 12.0 – 0.327 $S$ | 18.4 | 111 /$S$ |
| flat elements supported on both edges | B.5.4.2 | $b/t$ | 9.1 | 28.2 | 12.0 – 0.105 $S$ | 58 | 346 /$S$ |
| flat elements supported on both edges and with an intermediate stiffener | B.5.4.4 | $\lambda_s$ | 9.1 | 21.8 | 10.2 – 0.051 $S$ | 133 | 60,414 /$S^2$ |
| curved elements supported on both edges | B.5.4.5 | $R_b/t$ | 9.1 | 46.4 | 11.8 – 0.396 $S^{1/2}$ | 390 | 3,776 /[$S$(1+$S^{1/2}$/35)²] |
| flat elements—alternate method | B.5.4.6 | $\lambda_{eq}$ | 9.1 | 45.1 | 12.0 – 0.065 $S$ | 92 | 554 /$S$ |
| Elements—Flexural Compression | | | | | | | |
| flat elements supported on both edges | B.5.5.1 | $b/t$ | 11.8 | 64.2 | 16.0 – 0.065 $S$ | 123 | 982 /$S$ |
| flat elements supported on tension edge, compression edge free | B.5.5.2 | $b/t$ | 11.8 | 11.9 | 16.0 – 0.350 $S$ | 30 | 4,932 /$S^2$ |
| flat elements supported on both edges and with a longitudinal stiffener | B.5.5.3 | $b/t$ | 11.8 | 143.8 | 16.0 – 0.029 $S$ | 275 | 2,201 /$S$ |
| flat elements—alternate method | B.5.5.4 | $\lambda_{eq}$ | 11.8 | 41.7 | 16.0 – 0.0100 $S$ | 80 | 638 /$S$ |
| Elements—Shear | | | | | | | |
| flat elements supported on both edges | G.2 | $b/t$ | 5.5 | 47.5 | 7.3 – 0.038 $S$ | 126 | 38,665 /$S^2$ |

# Table 2-21
# ALLOWABLE STRESSES FOR BUILDING-TYPE STRUCTURES (UNWELDED)

| Allowable Stresses $F/\Omega$ (k/in²) | Section | $F/\Omega$ |
|---|---|---|
| Axial Tension | | |
| axial tension stress on net effective area | D.2b | 15.4 |
| axial tension stress on gross area | D.2a | 15.2 |

| 6063 – T6 | Extrusions and Pipe |
|---|---|
| $F_{ty}$ = 25 k/in² | $E$ = 10,100 k/in² |
| $F_{cy}$ = 25 k/in² | $k_t$ = 1 |
| $F_{tu}$ = 30 k/in² | |

| Flexure | | Tension | Compression | |
|---|---|---|---|---|
| elements in uniform stress | F.8.1.1 | 15.2 | see B.5.4.1 thru B.5.4.5 and E.4.2 | |
| elements in flexure | F.8.1.2, F.4.1 | 19.7 | 19.7 | see also F.4.2 |
| round tubes | F.6.1 | 17.7 | 17.7 | see also F.6.2 |
| rods | F.7 | 19.7 | 19.7 | |
| Bearing | | | | |
| bolts or rivets on holes | J.3.7a, J.4.7 | 30.8 | | |
| bolts on slots, pins on holes, flat surfaces | J.3.7b, J.7 | 20.5 | | |

| Axial Compression | | Slenderness $S$ | $F/\Omega$ for $S \le S_1$ | $S_1$ | $F/\Omega$ for $S_1 < S < S_2$ | $S_2$ | $F/\Omega$ for $S \ge S_2$ |
|---|---|---|---|---|---|---|---|
| all shapes member buckling | E.3 | $kL/r$ | | | $14.2 - 0.074\,S$ | 78 | $51{,}352/S^2$ |
| Flexural Compression | | | | | | | |
| open shapes lateral-torsional buckling | F.2.1 | $L_b/(r_{ye}C_b^{1/2})$ | | | $16.7 - 0.073\,S$ | 94 | $86{,}996/S^2$ |
| closed shapes lateral-torsional buckling | F.3.1 | $2L_bS_c/(C_b(I_yJ)^{1/2})$ | | | $16.7 - 0.140\,S^{1/2}$ | 2400 | $23{,}599/S$ |
| rectangular bars lateral-torsional buckling | F.4.2 | $(d/t)(L_b/(C_bd))^{1/2}$ | | | $27.9 - 0.532\,S$ | 35 | $11{,}420/S^2$ |
| round tubes local buckling | F.6.2 | $R_b/t$ | $27.7 - 1.697\,S^{1/2}$ | 70 | $18.5 - 0.593\,S^{1/2}$ | 189 | $3{,}776/[S(1+S^{1/2}/35)^2]$ |
| Elements—Uniform Compression | | | | | | | |
| flat elements supported on one edge in columns whose buckling axis is not an axis of symmetry | B.5.4.1 | $b/t$ | 15.2 | 7.3 | $19.0 - 0.530\,S$ | 15 | $2{,}417/S^2$ |
| flat elements supported on one edge in all other columns and all beams | B.5.4.1 | $b/t$ | 15.2 | 7.3 | $19.0 - 0.530\,S$ | 12.6 | $155/S$ |
| flat elements supported on both edges | B.5.4.2 | $b/t$ | 15.2 | 22.8 | $19.0 - 0.170\,S$ | 39 | $484/S$ |
| flat elements supported on both edges and with an intermediate stiffener | B.5.4.4 | $\lambda_s$ | 15.2 | 18.2 | $16.7 - 0.088\,S$ | 78 | $60{,}414/S^2$ |
| curved elements supported on both edges | B.5.4.5 | $R_b/t$ | 15.2 | 31.2 | $18.5 - 0.593\,S^{1/2}$ | 189 | $3{,}776/[S(1+S^{1/2}/35)^2]$ |
| flat elements—alternate method | B.5.4.6 | $\lambda_{eq}$ | 15.2 | 36.5 | $19.0 - 0.106\,S$ | 63 | $775/S$ |
| Elements—Flexural Compression | | | | | | | |
| flat elements supported on both edges | B.5.5.1 | $b/t$ | 19.7 | 54.9 | $27.9 - 0.150\,S$ | 93 | $1{,}298/S$ |
| flat elements supported on tension edge, compression edge free | B.5.5.2 | $b/t$ | 19.7 | 10.2 | $27.9 - 0.810\,S$ | 23 | $4{,}932/S^2$ |
| flat elements supported on both edges and with a longitudinal stiffener | B.5.5.3 | $b/t$ | 19.7 | 123.0 | $27.9 - 0.067\,S$ | 208 | $2{,}910/S$ |
| flat elements—alternate method | B.5.5.4 | $\lambda_{eq}$ | 19.7 | 35.7 | $27.9 - 0.231\,S$ | 60 | $844/S$ |
| Elements—Shear | | | | | | | |
| flat elements supported on both edges | G.2 | $b/t$ | 9.1 | 38.7 | $11.5 - 0.062\,S$ | 76 | $38{,}665/S^2$ |

# BLAZER® ENGINEERING DATA

The following information is compiled to assist the design professional in selecting the appropriate fastener for the application. Data supplied is compiled from fastener standards and independent tests. An engineering professional should be consulted to determine expected loads on the connection, environmental effects, and any other conditions that could effect the performance of the fastener. Selecting a fastener is the responsibility of the engineer and changes to a fastener should not be made without approval. Using the wrong fastener can lead to failure.
TFC WILL NOT WARRANTY, EITHER EXPRESSED OR IMPLIED,THE USE OF THIS INFORMATION.

## TECHNICAL DATA

BLAZER® self-drilling fasteners are produced and perform to SAEJ78, ASME/ANSI 18.18. and AISI TS-4-02 specifications. Conforms to ICCESAC18 acceptance criteria for tapping screw fasteners.

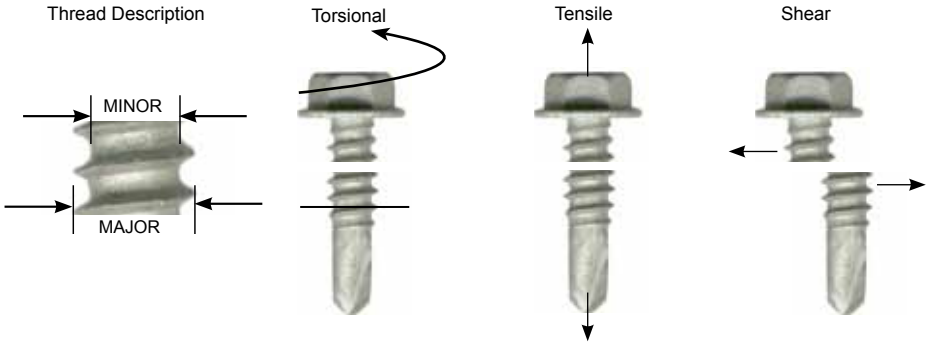


### Physical Properties

REV.JES082712

| Fastener Diameter | Nominal Screw Diameter | Major Diameter (inch) | | Minor Diameter (inch) | | Area Of Minor Dia. (sq in.) | Torsional (Lb-In.) | Tensile (Pounds) | Shear (Pounds) |
|---|---|---|---|---|---|---|---|---|---|
| | | Max | Min | Max | Min | | | | |
| #6-20 | 0.138 | 0.139 | 0.135 | 0.104 | 0.099 | 0.0077 | 25 | 1,125 | 750 |
| #8-18 | 0.164 | 0.166 | 0.161 | 0.122 | 0.116 | 0.0106 | 42 | 1,575 | 1,000 |
| #10-16 | 0.190 | 0.189 | 0.183 | 0.141 | 0.135 | 0.0143 | 61 | 2,100 | 1,400 |
| #10-24 | 0.190 | 0.190 | 0.182 | 0.144 | 0.137 | 0.0147 | 65 | 3,400 | 2,275 |
| #12-14 | 0.216 | 0.215 | 0.209 | 0.164 | 0.157 | 0.0194 | 92 | 2,778 | 2,000 |
| #12-24 | 0.216 | 0.216 | 0.209 | 0.189 | 0.185 | 0.0269 | 100 | 3,188 | 2,100 |
| 1/4-14 | 0.250 | 0.246 | 0.240 | 0.192 | 0.185 | 0.0269 | 150 | 3,850 | 2,600 |
| 1/4-20 | 0.250 | 0.250 | 0.242 | 0.218 | 0.214 | 0.0360 | 156 | 4,275 | 2,700 |
| #18-9 | 0.306 | 0.306 | 0.300 | 0.217 | 0.209 | 0.0343 | 170 | 4,550 | 2,576 |
| 5/16-12 | 0.313 | 0.315 | 0.306 | 0.244 | 0.236 | 0.0702 | 290 | 5439 | 3264 |

Material: C1018-C1022 / 410 SS

Heat Treatment: Case Harden

Case Hardness: 52-58 Rockwell C

Case Depth:

#6 Dia = .002" - .007"

#8, #10, #12 Dia = .004" - .009"

1/4" = .005" - .011"

Core Hardness

Carbon Steel: 32-40 Rockwell C

410 Stainless: 42-48 Rockwell C

Ductility: 5 Degree minimum bend

| English to Metric | Formula to Use |
|---|---|
| Decimal to Millimeters | Decimal x 25.4 |
| PSI to Newton / Millimeters² | PSI x .007 |
| Pounds Force to Newtons | Pounds Force x 4.448 |

DISCLAIMER: ALL TEST RESULTS AND SPECIFICATIONS ARE A RESULT OF LABORATORY TESTS. APPROPRIATE SAFETY FACTORS SHOULD BE USED BY THE USER OR SPECIFIER. DETERMINING THE PROPER FASTENER IS THE RESPONSIBILITY OF THE USER OR SPECIFIER. SINCE APPLICATION CONDITIONS VARY AND ARE UNCONTROLLABLE BY TFC, WE ASSUME NO LIABILITY FOR THE USE OF THIS INFORMATION.

| Gauge Thickness | Decimal | Metric |
|---|---|---|
| 29 GA | .013" | .33mm |
| 28 GA | .015" | .38mm |
| 26 GA | .018" | .46mm |
| 24 GA | .024" | .61mm |
| 22 GA | .030" | .76mm |
| 20 GA | .036" | .91mm |
| 18 GA | .048" | 1.22mm |
| 16 GA | .060" | 1.52mm |
| 14 GA | .075" | 1.91mm |
| 12 GA | .105" | 2.67mm |
| 1/8" | .125" | 3.18mm |
| 10 GA | .135" | 3.43mm |
| 1/4" | .250" | 6.35mm |
| 5/16" | .312" | 7.92mm |
| 3/8" | .375" | 9.53mm |
| 1/2" | .500" | 12.7mm |

## PULLOVER TEST RESULTS

These pullover results are for self-sealing fasteners listed in this catalog.

Pounds - Ultimate Average

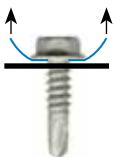

| Steel Thickness | BOND-SEALER | | FLANGE SEALER | ZINC CAP HEAD | STAINLESS CAP HEAD |
|---|---|---|---|---|---|
| | 12.7MM OD | 15MM OD | | | |
| 22 ga | 945 | 1,249 | 1,298 | 1,647 | 1,298 |
| 24 ga | 704 | 1,056 | 1,102 | 1,310 | 1,102 |
| 26 ga | 519 | 654 | 692 | 794 | 692 |

Note: Estimated pullover for fasteners without sealing washers can be calculated using the following formula per AISI.

Pullover force = 1.5 -x- Thickness of the member in contact with the screw head. -x- Larger of the screw head diameter or washer diameter. -x- Tensile strength of the member in contact with the screw head.

| | | | |
|---|---|---|---|
| Company: | | Page: | 1 |
| Address: | | Specifier: | |
| Phone I Fax: | \| | E-Mail: | |
| Design: | Omnimax - Pergola | Date: | 12/17/2020 |
| Fastening point: | | | |

**Specifier's comments:**

# 1 Anchor Design

## 1.1 Input data

| | |
|---|---|
| **Anchor type and diameter:** | **HIT-HY 200 + HIT-Z 1/2** |
| Item number: | 2018444 HIT-Z 1/2" x 6 1/2" (element) / 2022793 HIT-HY 200-R (adhesive) |
| Effective embedment depth: | $h_{ef,opti}$ = 3.661 in. ($h_{ef,limit}$ = 6.000 in.) |
| Material: | DIN EN ISO 4042 |
| Evaluation Service Report: | ESR-3187 |
| Issued I Valid: | 4/1/2020 \| 3/1/2022 |
| Proof: | Design Method ACI 318-14 / Chem |
| Stand-off installation: | $e_b$ = 0.000 in. (no stand-off); t = 0.500 in. |
| Anchor plate[CBFEM] : | $l_x$ x $l_y$ x t = 7.125 in. x 7.125 in. x 0.500 in.; |
| Profile: | Square HSS (AISC), HSS3-1/2X3-1/2X.250; (L x W x T) = 3.500 in. x 3.500 in. x 0.250 in. |
| Base material: | cracked concrete, 4000, $f_c'$ = 4,000 psi; h = 420.000 in., Temp. short/long: 32/32 °F |
| **Installation:** | **hammer drilled hole, Installation condition: Dry** |
| Reinforcement: | tension: condition B, shear: condition B; no supplemental splitting reinforcement present<br>edge reinforcement: none or < No. 4 bar |

[CBFEM] - The anchor calculation is based on a component-based Finite Element Method (CBFEM)

**Geometry [in.] & Loading [lb, in.lb]**

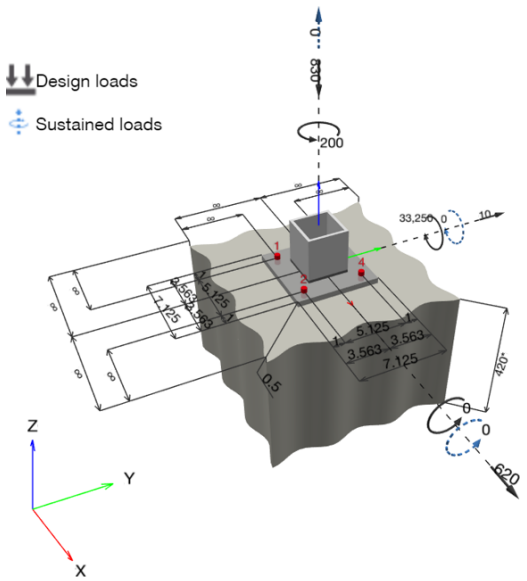

| | | | |
|---|---|---|---|
| Company: | | Page: | 2 |
| Address: | | Specifier: | |
| Phone I Fax: | \| | E-Mail: | |
| Design: | Omnimax - Pergola | Date: | 12/17/2020 |
| Fastening point: | | | |

### 1.1.1 Unfactored loads

| | Sustained load factor | Load factor $f_1$ or $f_2$ | $V_x$ [lb] | $V_y$ [lb] | N [lb] | $M_x$ [in.lb] | $M_y$ [in.lb] | $M_z$ [in.lb] |
|---|---|---|---|---|---|---|---|---|
| D (Dead) | 1.000 | - | - | - | - | - | - | - |
| F (Fluid) | 1.000 | - | - | - | - | - | - | - |
| T (Temperature) | 1.000 | - | - | - | - | - | - | - |
| L (Live) | 1.000 | 0.500 | - | - | - | - | - | - |
| H (Lateral) | 1.000 | - | - | - | - | - | - | - |
| $L_r$ (Roof live) | 1.000 | - | - | - | - | - | - | - |
| S (Snow) | 1.000 | 0.200 | - | - | - | - | - | - |
| R (Rain) | - | - | - | - | - | - | - | - |
| W (Wind) | - | - | 620 | 10 | -830 | - | 33,250 | 200 |
| E (Earthquake) | - | - | - | - | - | - | - | - |

### 1.1.2 Design results

| Case | Description | Forces [lb] / Moments [in.lb] | Seismic | Max. Util. Anchor [%] |
|---|---|---|---|---|
| 1 | Equation (16-4a) | N = -830; $V_x$ = 620; $V_y$ = 10; $M_x$ = 0; $M_y$ = 33,250; $M_z$ = 200; $N_{sus}$ = 0; $M_{x,sus}$ = 0; $M_{y,sus}$ = 0; | no | 100 |

### 1.2 Load case/Resulting anchor forces

**Anchor reactions [lb]**

Tension force: (+Tension, -Compression)

| Anchor | Tension force | Shear force | Shear force x | Shear force y |
|---|---|---|---|---|
| 1 | 3,557 | 170 | 168 | 30 |
| 2 | -1 | 162 | 162 | -2 |
| 3 | 3,557 | 155 | 148 | -45 |
| 4 | -1 | 145 | 142 | 26 |

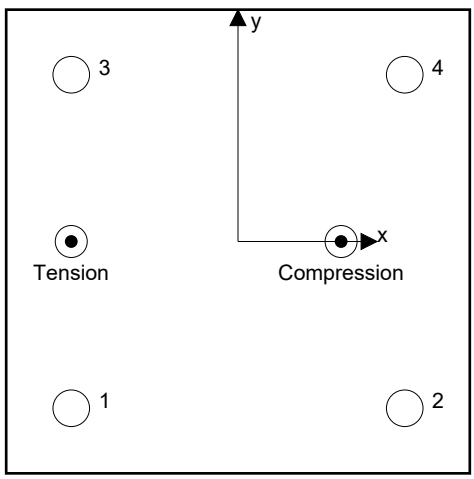


resulting tension force in (x/y)=(-2.562/-0.000): 7,113 [lb]
resulting compression force in (x/y)=(1.585/-0.000): 8,183 [lb]

Anchor forces are calculated based on a component-based Finite Element Method (CBFEM)

### 1.3 Tension load

| | Load $N_{ua}$ [lb] | Capacity $\phi$ $N_n$ [lb] | Utilization $\beta_N = N_{ua}/\phi$ $N_n$ | Status |
|---|---|---|---|---|
| Steel Strength* | 3,557 | 8,695 | 41 | OK |
| Pullout Strength* | 3,557 | 7,108 | 51 | OK |
| Sustained Tension Load Bond Strength* | N/A | N/A | N/A | N/A |
| Concrete Breakout Failure** | 7,114 | 7,167 | 100 | OK |

* highest loaded anchor **anchor group (anchors in tension)

Input data and results must be checked for conformity with the existing conditions and for plausibility!
PROFIS Engineering ( c ) 2003-2020 Hilti AG, FL-9494 Schaan Hilti is a registered Trademark of Hilti AG, Schaan

| | | | |
|---|---|---|---|
| Company: | | Page: | 3 |
| Address: | | Specifier: | |
| Phone I Fax: | \| | E-Mail: | |
| Design: | Omnimax - Pergola | Date: | 12/17/2020 |
| Fastening point: | | | |

### 1.3.1 Steel Strength

$N_{sa}$ = ESR value refer to ICC-ES ESR-3187
$\phi\ N_{sa} \geq N_{ua}$ ACI 318-14 Table 17.3.1.1

**Variables**

| $A_{se,N}$ [in.$^2$] | $f_{uta}$ [psi] |
|---|---|
| 0.14 | 94,200 |

**Calculations**

| $N_{sa}$ [lb] |
|---|
| 13,377 |

**Results**

| $N_{sa}$ [lb] | $\phi_{steel}$ | $\phi\ N_{sa}$ [lb] | $N_{ua}$ [lb] |
|---|---|---|---|
| 13,377 | 0.650 | 8,695 | 3,557 |

### 1.3.2 Pullout Strength

$N_{pn}$ = $N_p\ \lambda_a$ refer to ICC-ES ESR-3187
$\phi\ N_{pn} \geq N_{ua}$ ACI 318-14 Table 17.3.1.1

**Variables**

| $\lambda_a$ | $N_p$ [lb] |
|---|---|
| 1.000 | 10,936 |

**Calculations**

| - |
|---|
| - |

**Results**

| $N_{pn}$ [lb] | $\phi_{concrete}$ | $\phi\ N_{pn}$ [lb] | $N_{ua}$ [lb] |
|---|---|---|---|
| 10,936 | 0.650 | 7,108 | 3,557 |

Input data and results must be checked for conformity with the existing conditions and for plausibility!
PROFIS Engineering ( c ) 2003-2020 Hilti AG, FL-9494 Schaan Hilti is a registered Trademark of Hilti AG, Schaan

| | | | |
|---|---|---|---|
| Company: | | Page: | 4 |
| Address: | | Specifier: | |
| Phone I Fax: | \| | E-Mail: | |
| Design: | Omnimax - Pergola | Date: | 12/17/2020 |
| Fastening point: | | | |

### 1.3.3 Concrete Breakout Failure

$N_{cbg} = \left(\frac{A_{Nc}}{A_{Nc0}}\right) \psi_{ec,N}\ \psi_{ed,N}\ \psi_{c,N}\ \psi_{cp,N}\ N_b$ ACI 318-14 Eq. (17.4.2.1b)

$\phi\ N_{cbg} \geq N_{ua}$ ACI 318-14 Table 17.3.1.1

$A_{Nc}$ see ACI 318-14, Section 17.4.2.1, Fig. R 17.4.2.1(b)

$A_{Nc0} = 9\ h_{ef}^2$ ACI 318-14 Eq. (17.4.2.1c)

$\psi_{ec,N} = \left(\frac{1}{1 + \frac{2\ e'_N}{3\ h_{ef}}}\right) \leq 1.0$ ACI 318-14 Eq. (17.4.2.4)

$\psi_{ed,N} = 0.7 + 0.3\left(\frac{c_{a,min}}{1.5h_{ef}}\right) \leq 1.0$ ACI 318-14 Eq. (17.4.2.5b)

$\psi_{cp,N} = \text{MAX}\left(\frac{c_{a,min}}{c_{ac}}, \frac{1.5h_{ef}}{c_{ac}}\right) \leq 1.0$ ACI 318-14 Eq. (17.4.2.7b)

$N_b = k_c\ \lambda_a\ \sqrt{f'_c}\ h_{ef}^{1.5}$ ACI 318-14 Eq. (17.4.2.2a)

#### Variables

| $h_{ef}$ [in.] | $e_{c1,N}$ [in.] | $e_{c2,N}$ [in.] | $c_{a,min}$ [in.] | $\psi_{c,N}$ |
|---|---|---|---|---|
| 3.661 | 0.000 | 0.000 | ∞ | 1.000 |

| $c_{ac}$ [in.] | $k_c$ | $\lambda_a$ | $f'_c$ [psi] |
|---|---|---|---|
| 5.483 | 17 | 1.000 | 4,000 |

#### Calculations

| $A_{Nc}$ [in.$^2$] | $A_{Nc0}$ [in.$^2$] | $\psi_{ec1,N}$ | $\psi_{ec2,N}$ | $\psi_{ed,N}$ | $\psi_{cp,N}$ | $N_b$ [lb] |
|---|---|---|---|---|---|---|
| 176.47 | 120.26 | 1.000 | 1.000 | 1.000 | 1.000 | 7,515 |

#### Results

| $N_{cbg}$ [lb] | $\phi_{concrete}$ | $\phi\ N_{cbg}$ [lb] | $N_{ua}$ [lb] |
|---|---|---|---|
| 11,026 | 0.650 | 7,167 | 7,114 |

Input data and results must be checked for conformity with the existing conditions and for plausibility!
PROFIS Engineering ( c ) 2003-2020 Hilti AG, FL-9494 Schaan Hilti is a registered Trademark of Hilti AG, Schaan

| | | | |
|---|---|---|---|
| Company: | | Page: | 5 |
| Address: | | Specifier: | |
| Phone I Fax: | \| | E-Mail: | |
| Design: | Omnimax - Pergola | Date: | 12/17/2020 |
| Fastening point: | | | |

### 1.4 Shear load

| | Load $V_{ua}$ [lb] | Capacity $\phi$ $V_n$ [lb] | Utilization $\beta_V = V_{ua}/\phi$ $V_n$ | Status |
|---|---|---|---|---|
| Steel Strength* | 170 | 3,532 | 5 | OK |
| Steel failure (with lever arm)* | N/A | N/A | N/A | N/A |
| Pryout Strength (Concrete Breakout Strength controls)** | 620 | 21,374 | 3 | OK |
| Concrete edge failure in direction ** | N/A | N/A | N/A | N/A |

* highest loaded anchor **anchor group (relevant anchors)

#### 1.4.1 Steel Strength

$V_{sa}$ = ESR value refer to ICC-ES ESR-3187
$\phi$ $V_{steel} \geq V_{ua}$ ACI 318-14 Table 17.3.1.1

**Variables**

| $A_{se,V}$ [in.$^2$] | $f_{uta}$ [psi] |
|---|---|
| 0.14 | 94,200 |

**Calculations**

| $V_{sa}$ [lb] |
|---|
| 5,886 |

**Results**

| $V_{sa}$ [lb] | $\phi_{steel}$ | $\phi$ $V_{sa}$ [lb] | $V_{ua}$ [lb] |
|---|---|---|---|
| 5,886 | 0.600 | 3,532 | 170 |

Input data and results must be checked for conformity with the existing conditions and for plausibility!
PROFIS Engineering ( c ) 2003-2020 Hilti AG, FL-9494 Schaan Hilti is a registered Trademark of Hilti AG, Schaan

| | | | |
|---|---|---|---|
| Company: | | Page: | 6 |
| Address: | | Specifier: | |
| Phone I Fax: | \| | E-Mail: | |
| Design: | Omnimax - Pergola | Date: | 12/17/2020 |
| Fastening point: | | | |

### 1.4.2 Pryout Strength (Concrete Breakout Strength controls)

$V_{cpg} = k_{cp} \left[ \left( \frac{A_{Nc}}{A_{Nc0}} \right) \psi_{ec,N} \psi_{ed,N} \psi_{c,N} \psi_{cp,N} N_b \right]$ ACI 318-14 Eq. (17.5.3.1b)

$\phi V_{cpg} \geq V_{ua}$ ACI 318-14 Table 17.3.1.1

$A_{Nc}$ see ACI 318-14, Section 17.4.2.1, Fig. R 17.4.2.1(b)

$A_{Nc0} = 9 h_{ef}^2$ ACI 318-14 Eq. (17.4.2.1c)

$\psi_{ec,N} = \left( \frac{1}{1 + \frac{2 e'_N}{3 h_{ef}}} \right) \leq 1.0$ ACI 318-14 Eq. (17.4.2.4)

$\psi_{ed,N} = 0.7 + 0.3 \left( \frac{c_{a,min}}{1.5 h_{ef}} \right) \leq 1.0$ ACI 318-14 Eq. (17.4.2.5b)

$\psi_{cp,N} = \text{MAX}\left( \frac{c_{a,min}}{c_{ac}}, \frac{1.5 h_{ef}}{c_{ac}} \right) \leq 1.0$ ACI 318-14 Eq. (17.4.2.7b)

$N_b = k_c \lambda_a \sqrt{f'_c} h_{ef}^{1.5}$ ACI 318-14 Eq. (17.4.2.2a)

#### Variables

| $k_{cp}$ | $h_{ef}$ [in.] | $e_{c1,N}$ [in.] | $e_{c2,N}$ [in.] | $c_{a,min}$ [in.] |
|---|---|---|---|---|
| 2 | 3.661 | 0.005 | 0.322 | ∞ |

| $\psi_{c,N}$ | $c_{ac}$ [in.] | $k_c$ | $\lambda_a$ | $f'_c$ [psi] |
|---|---|---|---|---|
| 1.000 | 5.483 | 17 | 1.000 | 4,000 |

#### Calculations

| $A_{Nc}$ [in.$^2$] | $A_{Nc0}$ [in.$^2$] | $\psi_{ec1,N}$ | $\psi_{ec2,N}$ | $\psi_{ed,N}$ | $\psi_{cp,N}$ | $N_b$ [lb] |
|---|---|---|---|---|---|---|
| 258.94 | 120.26 | 0.999 | 0.944 | 1.000 | 1.000 | 7,515 |

#### Results

| $V_{cpg}$ [lb] | $\phi_{concrete}$ | $\phi V_{cpg}$ [lb] | $V_{ua}$ [lb] |
|---|---|---|---|
| 30,534 | 0.700 | 21,374 | 620 |

### 1.5 Combined tension and shear loads

| $\beta_N$ | $\beta_V$ | $\zeta$ | Utilization $\beta_{N,V}$ [%] | Status |
|---|---|---|---|---|
| 0.993 | 0.048 | 1.000 | 87 | OK |

$\beta_{NV} = (\beta_N + \beta_V) / 1.2 <= 1$

Input data and results must be checked for conformity with the existing conditions and for plausibility!
PROFIS Engineering ( c ) 2003-2020 Hilti AG, FL-9494 Schaan Hilti is a registered Trademark of Hilti AG, Schaan

### 1.6 Warnings

- The anchor design methods in PROFIS Engineering require rigid anchor plates as per current regulations (ETAG 001/Annex C, EOTA TR029, etc.). This means load re-distribution on the anchors due to elastic deformations of the anchor plate are not considered - the anchor plate is assumed to be sufficiently stiff, in order not to be deformed when subjected to the design loading. PROFIS Engineering calculates the minimum required anchor plate thickness with CBFEM to limit the stress of the anchor plate based on the assumptions explained above. The proof if the rigid base plate assumption is valid is not carried out by PROFIS Engineering. Input data and results must be checked for agreement with the existing conditions and for plausibility!
- Condition A applies where the potential concrete failure surfaces are crossed by supplementary reinforcement proportioned to tie the potential concrete failure prism into the structural member. Condition B applies where such supplementary reinforcement is not provided, or where pullout or pryout strength governs.
- Design Strengths of adhesive anchor systems are influenced by the cleaning method. Refer to the INSTRUCTIONS FOR USE given in the Evaluation Service Report for cleaning and installation instructions.
- For additional information about ACI 318 strength design provisions, please go to https://submittals.us.hilti.com/PROFISAnchorDesignGuide/
- Attention! In case of compressive anchor forces a buckling check as well as the proof of the local load transfer into and within the base material (incl. punching) has to be done separately.
- Installation of Hilti adhesive anchor systems shall be performed by personnel trained to install Hilti adhesive anchors. Reference ACI 318-14, Section 17.8.1.
- The anchor design methods in PROFIS Engineering require rigid anchor plates, as per current regulations (AS 5216:2018, ETAG 001/Annex C, EOTA TR029 etc.). This means that the anchor plate should be sufficiently rigid to prevent load re-distribution to the anchors due to elastic/plastic displacements. The user accepts that the anchor plate is considered close to rigid by engineering judgment."


PROFIS Engineering ( c ) 2003-2020 Hilti AG, FL-9494 Schaan Hilti is a registered Trademark of Hilti AG, Schaan

| | | | |
|---|---|---|---|
| Company: | | Page: | 8 |
| Address: | | Specifier: | |
| Phone I Fax: | \| | E-Mail: | |
| Design: | Omnimax - Pergola | Date: | 12/17/2020 |
| Fastening point: | | | |

### 1.7 Installation data

Profile: Square HSS (AISC), HSS3-1/2X3-1/2X.250; (L x W x T) = 3.500 in. x 3.500 in. x 0.250 in.

Hole diameter in the fixture (pre-setting) : $d_f$ = 0.562 in.

Hole diameter in the fixture (through fastening) : $d_f$ = 0.625 in.

Plate thickness (input): 0.500 in.

Drilling method: Hammer drilled
Cleaning: Compressed air cleaning of the drilled hole according to instructions for use is required

Anchor type and diameter: HIT-HY 200 + HIT-Z 1/2
Item number: 2018444 HIT-Z 1/2" x 6 1/2" (element) / 2022793 HIT-HY 200-R (adhesive)

Installation torque: 354 in.lb

Hole diameter in the base material: 0.562 in.

Hole depth in the base material: 3.661 in.

Minimum thickness of the base material: 5.911 in.

1/2 Hilti HIT-Z Carbon steel non-cleaning bonded expansion anchor with Hilti HIT-HY 200 Safe Set System

#### 1.7.1 Recommended accessories

| Drilling | Cleaning | Setting |
|---|---|---|
| • Suitable Rotary Hammer<br>• Properly sized drill bit | • - | • Dispenser including cassette and mixer<br>• Torque wrench |

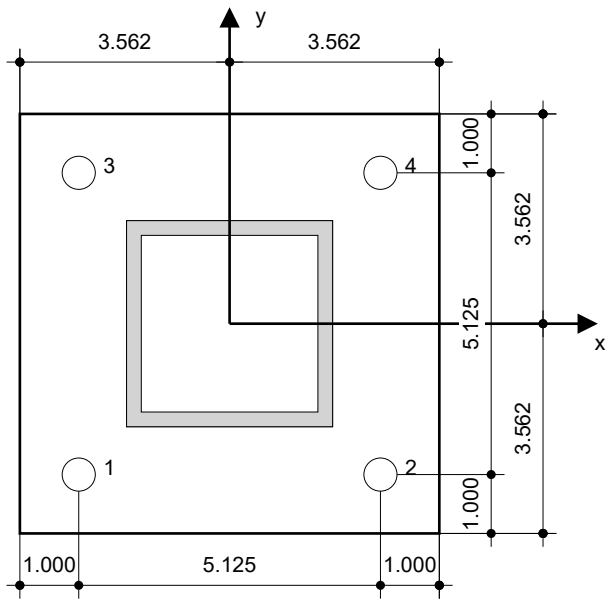


**Coordinates Anchor [in.]**

| Anchor | x | y | $c_{-x}$ | $c_{+x}$ | $c_{-y}$ | $c_{+y}$ |
|---|---|---|---|---|---|---|
| 1 | -2.562 | -2.562 | - | - | - | - |
| 2 | 2.562 | -2.562 | - | - | - | - |
| 3 | -2.562 | 2.562 | - | - | - | - |
| 4 | 2.562 | 2.562 | - | - | - | - |

Input data and results must be checked for conformity with the existing conditions and for plausibility!
PROFIS Engineering ( c ) 2003-2020 Hilti AG, FL-9494 Schaan Hilti is a registered Trademark of Hilti AG, Schaan

| | | | |
|---|---|---|---|
| Company: | | Page: | 9 |
| Address: | | Specifier: | |
| Phone I Fax: | \| | E-Mail: | |
| Design: | Omnimax - Pergola | Date: | 12/17/2020 |
| Fastening point: | | | |

# 2 Anchor plate design

### 2.1 Input data

| | |
|---|---|
| Anchor plate: | Shape: Rectangular<br>$l_x$ x $l_y$ x t = 7.125 in x 7.125 in x 0.500 in<br>Calculation: CBFEM<br>Material: 6061-T6 Aluminum; $F_y$ = 35,000 psi; $F_u$ = 38,000 psi; E_s = 14,503,774 psi; v = 0.35; D = 169.34 lb/ft³; |
| Anchor type and size: | HIT-HY 200 + HIT-Z 1/2, $h_{ef}$ = 3.661 in |
| Anchor stiffness: | The anchor is modeled considering stiffness values determined from load displacement curves tested in an independent laboratory. Please note that no simple replacement of the anchor is possible as the anchor stiffness has a major impact on the load distribution results. |
| Design method: | AISC and LRFD-based design using component-based FEM |
| Stand-off installation: | $e_b$ = 0.000 in (No stand-off); t = 0.500 in |
| Profile: | HSS3-1/2X3-1/2X.250; (L x W x T x FT) = 3.500 in x 3.500 in x 0.250 in x -<br>Material: 6061-T6 Aluminum; $F_y$ = 35,000 psi; $F_u$ = 38,000 psi; E_s = 14,503,774 psi; v = 0.35; D = 169.34 lb/ft³;<br>Eccentricity x: 0.000 in<br>Eccentricity y: 0.000 in |
| Base material: | Cracked concrete; 4000; $f_{c,cyl}$ = 4,000 psi; h = 420.000 in |
| Welds (profile to anchor plate): | Type of redistribution: Plastic<br>Material: E70xx |
| Mesh size: | Number of elements on edge: 8<br>Min. size of element: 0.394 in<br>Max. size of element: 1.969 in |

Input data and results must be checked for conformity with the existing conditions and for plausibility!
PROFIS Engineering ( c ) 2003-2020 Hilti AG, FL-9494 Schaan Hilti is a registered Trademark of Hilti AG, Schaan

| | | | |
|---|---|---|---|
| Company: | | Page: | 10 |
| Address: | | Specifier: | |
| Phone I Fax: | \| | E-Mail: | |
| Design: | Omnimax - Pergola | Date: | 12/17/2020 |
| Fastening point: | | | |

### 2.2 Summary

| | Description | Profile | | Anchor plate | | | Concrete [%] |
|---|---|---|---|---|---|---|---|
| | | $\sigma_{Ed}$ [psi] | $\varepsilon_{Pl}$ [%] | $\sigma_{Ed}$ [psi] | $\varepsilon_{Pl}$ [%] | Hole bearing [%] | |
| 1 | Equation (16-4a) | 31,892 | 0.07 | 22,116 | 0.00 | 2 | 10 |

### 2.3 Anchor plate classification

Results below are displayed for the decisive load combinations: Equation (16-4a)

| Anchor tension forces | Equivalent rigid anchor plate (CBFEM) | Component-based Finite Element Method (CBFEM) anchor plate design |
|---|---|---|
| Anchor 1 | 2,966 lb | 3,557 lb |
| Anchor 2 | -1 lb | -1 lb |
| Anchor 3 | 2,966 lb | 3,557 lb |
| Anchor 4 | -1 lb | -1 lb |

User accepted to consider the selected anchor plate as rigid by his/her engineering judgement. This means the anchor design guidelines can be applied.

Input data and results must be checked for conformity with the existing conditions and for plausibility!
PROFIS Engineering ( c ) 2003-2020 Hilti AG, FL-9494 Schaan Hilti is a registered Trademark of Hilti AG, Schaan

| | | | |
|---|---|---|---|
| Company: | | Page: | 11 |
| Address: | | Specifier: | |
| Phone I Fax: | \| | E-Mail: | |
| Design: | Omnimax - Pergola | Date: | 12/17/2020 |
| Fastening point: | | | |

### 2.4 Profile/Stiffeners/Plate

Profile and stiffeners are verified at the level of the steel to concrete connection. The connection design does not replace the steel design for critical cross sections, which should be performed outside of PROFIS Engineering.

#### 2.4.1 Equivalent stress and plastic strain

| Part | Load combination | Material | $f_y$ [psi] | $\varepsilon_{lim}$ [%] | $\sigma_{Ed}$ [psi] | $\varepsilon_{Pl}$ [%] | Status |
|---|---|---|---|---|---|---|---|
| Plate | Equation (16-4a) | 6061-T6 Aluminum | 35,000 | 5.00 | 22,116 | 0.00 | OK |
| Profile | Equation (16-4a) | 6061-T6 Aluminum | 35,000 | 5.00 | 31,892 | 0.07 | OK |
| Profile | Equation (16-4a) | 6061-T6 Aluminum | 35,000 | 5.00 | 23,924 | 0.00 | OK |
| Profile | Equation (16-4a) | 6061-T6 Aluminum | 35,000 | 5.00 | 23,267 | 0.00 | OK |
| Profile | Equation (16-4a) | 6061-T6 Aluminum | 35,000 | 5.00 | 23,241 | 0.00 | OK |

#### 2.4.1.1 Equivalent stress

Results below are displayed for the decisive load combination: 1 - Equation (16-4a)

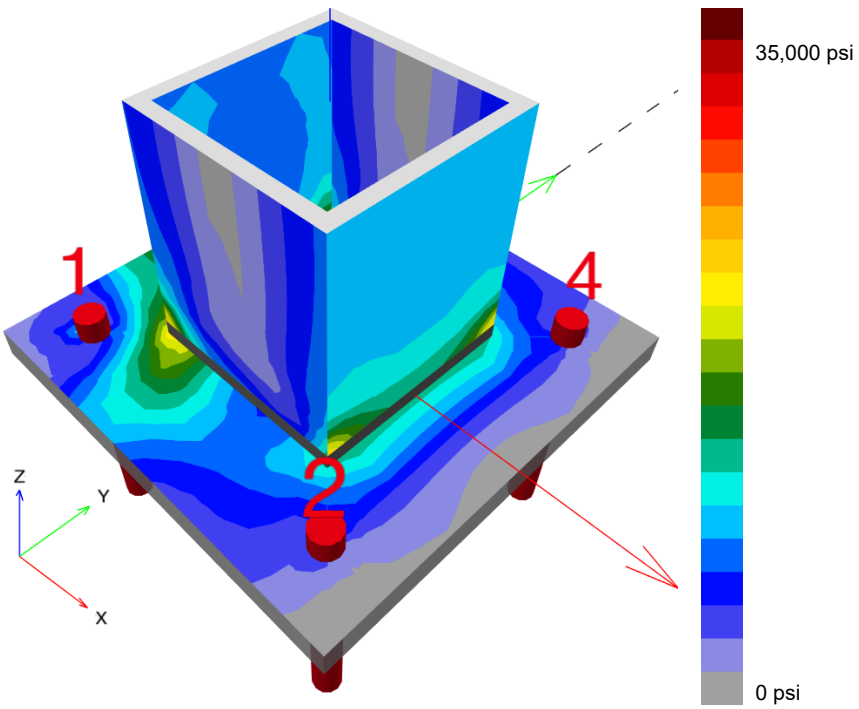

| | | | |
|---|---|---|---|
| Company: | | Page: | 12 |
| Address: | | Specifier: | |
| Phone I Fax: | \| | E-Mail: | |
| Design: | Omnimax - Pergola | Date: | 12/17/2020 |
| Fastening point: | | | |

#### 2.4.1.2 Plastic strain

Results below are displayed for the decisive load combination: 1 - Equation (16-4a)

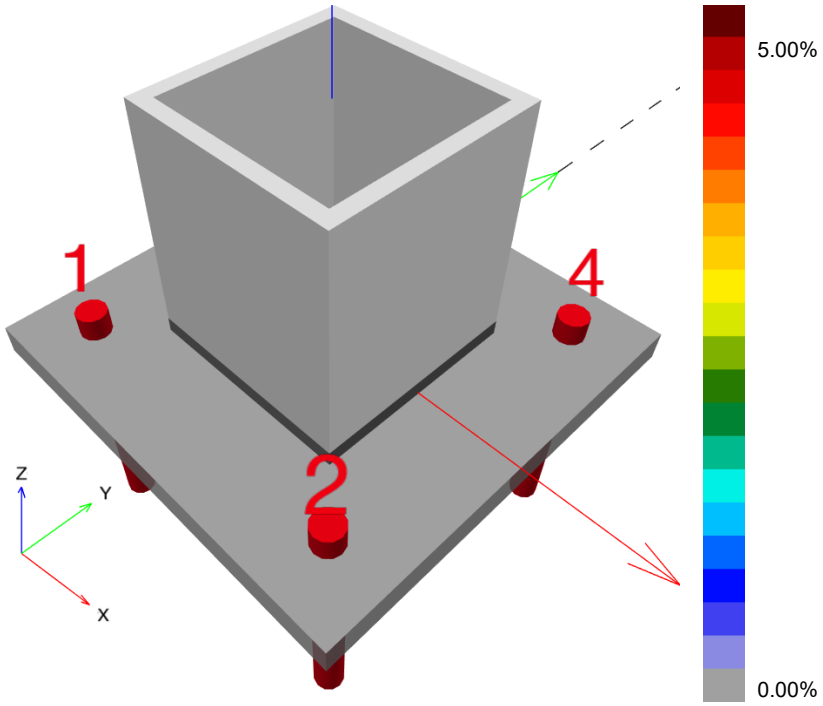


#### 2.4.2 Plate hole bearing resistance, AISC 360-16 Section J3

Decisive load combination: 1 - Equation (16-4a)

**Equations**

$R_n = \min(1.2\, l_c\, t\, F_u\, ,\ 2.4\, d\, t\, F_u)$ (AISC 360-16 J3-6a, c)

$\Phi R_n = 0.75\, R_n$

$V \leq \Phi R_n$

**Variables**

| | $l_c$ [in] | t [in] | $F_u$ [psi] | d [in] | $R_n$ [lb] |
|---|---|---|---|---|---|
| Anchor 1 | 0.735 | 0.500 | 38,000 | 0.500 | 16,750 |
| Anchor 2 | 4.563 | 0.500 | 38,000 | 0.500 | 22,800 |
| Anchor 3 | 0.763 | 0.500 | 38,000 | 0.500 | 17,396 |
| Anchor 4 | 5.948 | 0.500 | 38,000 | 0.500 | 22,800 |

Input data and results must be checked for conformity with the existing conditions and for plausibility!
PROFIS Engineering ( c ) 2003-2020 Hilti AG, FL-9494 Schaan Hilti is a registered Trademark of Hilti AG, Schaan

| | | | |
|---|---|---|---|
| Company: | | Page: | 13 |
| Address: | | Specifier: | |
| Phone I Fax: | \| | E-Mail: | |
| Design: | Omnimax - Pergola | Date: | 12/17/2020 |
| Fastening point: | | | |

**Results**

| | V [lb] | $\Phi R_n$ [lb] | Utilization [%] | Status |
|---|---|---|---|---|
| Anchor 1 | 170 | 12,563 | 2 | OK |
| Anchor 2 | 162 | 17,100 | 1 | OK |
| Anchor 3 | 154 | 13,047 | 2 | OK |
| Anchor 4 | 145 | 17,100 | 1 | OK |

Input data and results must be checked for conformity with the existing conditions and for plausibility!
PROFIS Engineering ( c ) 2003-2020 Hilti AG, FL-9494 Schaan Hilti is a registered Trademark of Hilti AG, Schaan

### 2.5 Concrete

Decisive load combination: 1 - Equation (16-4a)

#### 2.5.1 Compression in concrete under the anchor plate

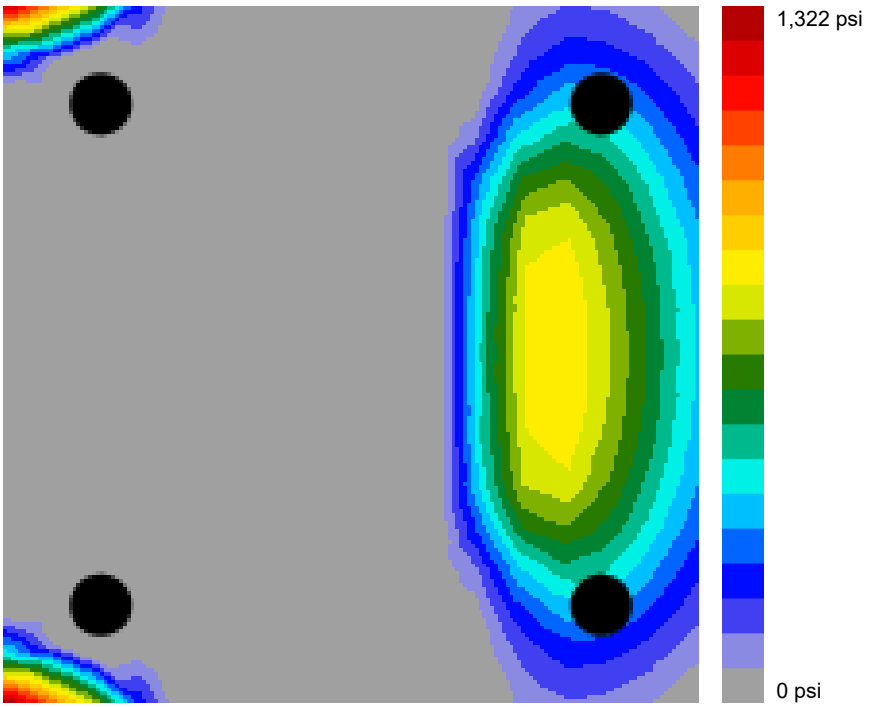


#### 2.5.2 Concrete block compressive strength resistance check, AISC 360-16 Section J8

**Equations**

$F_p = \Phi f_{p,max}$

$f_{p,max} = 0.85 f_c' \sqrt{(\frac{A_2}{A_1})} \leq 1.7 f_c; \quad \sqrt{(\frac{A_2}{A_1})} \leq 2$

$\sigma = \frac{N}{A_1}$

$\text{Utilization} = \frac{\sigma}{F_p}$

**Variables**

| N [lb] | $f_c'$ [psi] | Φ | $A_1$ [in²] | $A_2$ [in²] |
|---|---|---|---|---|
| 8,183 | 4,000 | 0.65 | 20.51 | 514,541.57 |

**Results**

| Load combination | $F_p$ [psi] | σ [psi] | Utilization [%] | Status |
|---|---|---|---|---|
| Equation (16-4a) | 4,420 | 399 | 10 | OK |

Input data and results must be checked for conformity with the existing conditions and for plausibility!
PROFIS Engineering ( c ) 2003-2020 Hilti AG, FL-9494 Schaan Hilti is a registered Trademark of Hilti AG, Schaan

### 2.6 Symbol explanation

| | |
|---|---|
| $A_1$ | Loaded area of concrete |
| $A_2$ | Supporting area |
| d | Nominal diameter of the bolt |
| $\varepsilon_{lim}$ | Limit plastic strain |
| $\varepsilon_{Pl}$ | Plastic strain from CBFEM results |
| $f_c$ | Concrete compressive strength |
| $f_c'$ | Concrete compressive strength |
| $F_u$ | Specified minimum tensile strength of the connected material |
| $F_p$ | Concrete block design bearing strength |
| $f_{p,max}$ | Concrete block design bearing strength maximum |
| $f_y$ | Yield strength |
| $l_c$ | Clear distance, in the direction of the force, between the edge of the hole and the edge of the adjacent hole or edge of the material |
| N | Resulting compression force |
| $\sigma$ | Average stress in concrete |
| $\sigma_{Ed}$ | Equivalent stress |
| $\Phi$ | Resistance factor |
| $\Phi R_n$ | Factored resistance |
| t | Thickness of the anchor plate |
| V | Resultant of shear forces Vy, Vz in bolt. |

### 2.7 Warnings

- By using the CBFEM calculation functionality of PROFIS Engineering you may act outside the applicable design codes and your specified anchor plate may not behave rigid. Please, validate the results with a professional designer and/or structural engineer to ensure suitability and adequacy for your specific jurisdiction and project requirements.
- The anchor is modeled considering stiffness values determined from load displacement curves tested in an independent laboratory. Please note that no simple replacement of the anchor is possible as the anchor stiffness has a major impact on the load distribution results.

Input data and results must be checked for conformity with the existing conditions and for plausibility!
PROFIS Engineering ( c ) 2003-2020 Hilti AG, FL-9494 Schaan Hilti is a registered Trademark of Hilti AG, Schaan

| | | | |
|---|---|---|---|
| Company: | | Page: | 16 |
| Address: | | Specifier: | |
| Phone I Fax: | \| | E-Mail: | |
| Design: | Omnimax - Pergola | Date: | 12/17/2020 |
| Fastening point: | | | |

## 3 Summary of results

Design of the anchor plate, anchors, welds and other elements are based on CBFEM (component based finite element method) and AISC.

| | Load combination | Max. utilization | Status |
|---|---|---|---|
| Anchors | Equation (16-4a) | 100% | OK |
| Anchor plate | Equation (16-4a) | 64% | OK |
| Concrete | Equation (16-4a) | 10% | OK |
| Profile | Equation (16-4a) | 92% | OK |

**Fastening meets the design criteria!**

Input data and results must be checked for conformity with the existing conditions and for plausibility!
PROFIS Engineering ( c ) 2003-2020 Hilti AG, FL-9494 Schaan Hilti is a registered Trademark of Hilti AG, Schaan

| | | | |
|---|---|---|---|
| Company: | | Page: | 17 |
| Address: | | Specifier: | |
| Phone I Fax: | \| | E-Mail: | |
| Design: | Omnimax - Pergola | Date: | 12/17/2020 |
| Fastening point: | | | |

## 4 Remarks; Your Cooperation Duties

- Any and all information and data contained in the Software concern solely the use of Hilti products and are based on the principles, formulas and security regulations in accordance with Hilti's technical directions and operating, mounting and assembly instructions, etc., that must be strictly complied with by the user. All figures contained therein are average figures, and therefore use-specific tests are to be conducted prior to using the relevant Hilti product. The results of the calculations carried out by means of the Software are based essentially on the data you put in. Therefore, you bear the sole responsibility for the absence of errors, the completeness and the relevance of the data to be put in by you. Moreover, you bear sole responsibility for having the results of the calculation checked and cleared by an expert, particularly with regard to compliance with applicable norms and permits, prior to using them for your specific facility. The Software serves only as an aid to interpret norms and permits without any guarantee as to the absence of errors, the correctness and the relevance of the results or suitability for a specific application.
- You must take all necessary and reasonable steps to prevent or limit damage caused by the Software. In particular, you must arrange for the regular backup of programs and data and, if applicable, carry out the updates of the Software offered by Hilti on a regular basis. If you do not use the AutoUpdate function of the Software, you must ensure that you are using the current and thus up-to-date version of the Software in each case by carrying out manual updates via the Hilti Website. Hilti will not be liable for consequences, such as the recovery of lost or damaged data or programs, arising from a culpable breach of duty by you.

Input data and results must be checked for conformity with the existing conditions and for plausibility!
PROFIS Engineering ( c ) 2003-2020 Hilti AG, FL-9494 Schaan Hilti is a registered Trademark of Hilti AG, Schaan